SOUTHWEST 1/4 OF SECTION 23, TOWNSHIP 31 NORTH, RANGE 5 EAST, W.M.

CONSTRUCTION PLANS
FOR
EAGLECREST VIEW

IN THE CITY OF ARLINGTON, WASHINGTON
CITY OF ARLINGTON FILE NO. C-04-056-LP

GENERAL NOTES

1. ALL WORK AND MATERIALS SHALL BE IN ACCORDANCE WITH THE "STANDARD SPECIFICATIONS FOR ROAD, BRIDGE AND MUNICIPAL CONSTRUCTION," WASHINGTON STATE DEPARTMENT OF TRANSPORTATION AND AMERICAN PUBLIC WORKS ASSOCIATION, WASHINGTON STATE CHAPTER, MOST RECENT EDITION, EXCEPT WHERE MODIFIED BY THE LATEST EDITION OF THE CITY OF ARLINGTON CONSTRUCTION STANDARDS AND SPECIFICATIONS.
2. AN APPROVED COPY OF CONSTRUCTION PLANS MUST BE ON SITE WHENEVER CONSTRUCTION IS IN PROGRESS.
3. IT SHALL BE THE SOLE RESPONSIBILITY OF THE CONTRACTOR TO OBTAIN STREET USE AND ANY OTHER RELATED PERMITS PRIOR TO ANY CONSTRUCTION ACTIVITY IN THE CITY RIGHT-OF-WAY.
4. PRIOR TO ANY CONSTRUCTION ACTIVITY, THE CITY OF ARLINGTON PUBLIC WORKS DEPARTMENT (360) 403-3500 MUST BE CONTACTED FOR A PRECONSTRUCTION MEETING.
5. ALL LOCATIONS OF EXISTING UTILITIES HAVE BEEN ESTABLISHED BY FIELD SURVEY OR OBTAINED FROM AVAILABLE RECORDS AND SHOULD THEREFORE BE CONSIDERED APPROXIMATE ONLY AND NOT NECESSARILY COMPLETE. IT IS THE SOLE RESPONSIBILITY OF THE CONTRACTOR TO INDEPENDENTLY VERIFY THE ACCURACY OF ALL UTILITY LOCATIONS, AND TO FURTHER DISCOVER AND AVOID ANY OTHER UTILITIES WHICH MAY BE AFFECTED BY THIS WORK. THE CONTRACTOR SHALL CONTACT THE UTILITIES UNDERGROUND LOCATION SERVICE (1-800-424-5555) PRIOR TO CONSTRUCTION. THE OWNER OR THEIR REPRESENTATIVE SHALL BE IMMEDIATELY CONTACTED IF A UTILITY CONFLICT EXISTS.
6. ALL MATERIALS SHALL BE NEW AND UNDAMAGED, OF AN APPROVED BRAND, WITH REPLACEMENT AND REPAIR PARTS READILY AVAILABLE FROM THE ARLINGTON/ EVERETT/SEATTLE AREA.
7. ALL MATERIALS SHALL BE APPROVED BY THE CITY PRIOR TO INSTALLATION.
8. ALL PUBLIC WATER, SEWER, AND STORM DRAINAGE PIPING NOT IN PUBLIC RIGHT-OF-WAY REQUIRES 10 FOOT WIDE PAVEMENT EASEMENTS GRANTED TO THE CITY.
9. AS-BUILT PLANS SHALL BE SUBMITTED FOR ALL DEVELOPMENTS, SHORT PLATS, SUBDIVISIONS, AND ANY OTHER CONSTRUCTION RELATING TO THE CITY OF ARLINGTON STREETS, DRAINAGE, AND UTILITY SYSTEMS.

CONSTRUCTION SEQUENCE AND SCHEDULE

CONSTRUCTION SESQUENCE-PLAT INTERIOR

1. SCHEDULE PRE-CONSTRUCTION MEETING WITH CITY. PERFORMANCE BONDS SHALL BE SUBMITTED, ALSO A CITY RIGHT-OF-WAY PERMIT IS REQUIRED FOR FRONTAGE IMPROVEMENTS. PROVIDE COPY OF FPA, NPDES PERMIT AND ALL OTHER APPLICABLE DOCUMENTS.
2. INSTALL CONSTRUCTION ENTRANCE AT 176TH PL.
3. INSTALL SILT FENCE AND REQUIRED BMP'S THROUGHOUT PLAT, DO NOT ENCROACH INTO THE 10 FOOT VEGETATION RETENTION EASEMENT (VRE) DURING INSTALLATION.
4. CLEAR AND GRADE ROADWAY PRISM INCLUDING 10 FOOT UTILITY EASEMENT, DETETION POND LOCATION (TRACT 997), LOTS 17, 18, 19 FOR TEMPORARY SEDIMENT BASINS AND STOCKPILE AREA FOR DETENTION POND SPOILS. STABILIZE ROADWAY.
5. DENUDING OF ANY OTHER AREAS IS PROHIBITED UNTIL DETENTION POND IS OPERATIONAL AND ROADWAY HAS BEEN PERMANENTLY STABILIZED.
6. CONSTRUCT TEMPORARY SEDIMENT BASINS ON LOTS 17, 18 WITH GRAVEL RISERS, AND CONNECT INTO PLAT OF CROSSING AT EDGECOMB CREEK (FORMERLY KNOWN AS PLAT OF INCLINE).
7. CONSTRUCT PERMANENT DETENTION POND, INSTALL STORMWATER VAULT MAKE PERMANENT CONNECTIONS AND PLACE SYSTEM "ONLINE".
8. INSTALL UTILITIES WITHIN R.O.W.
9. INSTALL ROAD SUBGRADE.
10. COMPLETE CLEARING AND GRADING OF THE REMAINDER OF PLAT, STABILIZE EXPOSED SOILS WITH ACCEPTABLE BMP'S.
11. INSTALL CURB, GUTTER AND SIDEWALK, INSTALL ATB.

CONSTRUCTION SEQUENCE-FRONTAGE IMPROVEMENTS

1. PROVIDE CITY OF ALINGTON (COA) WITH WSDOT APPROVED CHANNELIZATION PLAN AND DEVELOPER AGREEMENT.
2. SEQUENCE CONSTRUCTION PER WSDOT APPROVED PLAN:
   - A. INSTALL INLET PROTECTION TO ALL UPSTREAM AND DOWNSTREAM CATCH BASINS. INSTALL FILTER FENCE AND ORANGE BARRIER FENCE, ROCK CHECK DAMS IN ROADSIDE DITCH AND OTHER REQUIRED BMPS.
   - B. INSTALL TEMPORARY CULVERT AT EAST END OF FRONTAGE.
   - C. PREPARE SOUTHWEST FRONTAGE CORNER FOR TEMPORARY SEDIMENT TANKS BY:
     - o. REMOVING TEMPORARY RETAINING WALL
     - b. CUTTING EMBANKMENT BACK AS REQUIRES TO INSTALL TEMPORARY SEDIMENT CONTROLS
     - c. INSTALL TEMPORARY STORM WATER SUMP AND CULVERT FROM EXISTING ROAD SIDE DITCH TO TEMPORARY STORM WATER SUMP
     - d. SETUP SETTLING TANKS (PROVIDED BY RAIN FOR RENT OR EQUIVALENT) AND PUMPS
     - e. INSTALL EMERGENCY OVERFLOW PUMP AND PIPE TO SEDIMENT BASINS ON-SITE AT LOCATION OF PROPOSED LOTS 17 & 18 (MOVE TO VAULT ON-SITE WHEN COMPLETED)
     - f. SETUP CONTAINER FOR STORING EMERGENCY BMP MATERIALS
   - D. EXCAVATE FRONTAGE EMBANKMENT, AND INSTALL PLASTIC GROUND COVER ON DISTURBED EMBANKMENT AT THE END OF EACH WORK DAY. INSTALL INTERCEPTOR DITCHES EVERY 50-FEET TO CHANNEL WATER TO ROAD SIDE DITCH.
   - E. INSTALL ARMORED CONSTRUCTION ROAD FOR PUD EQUIPMENT TO MOVE POWER POLE.
   - F. P.U.D. TO INSTALL NEW POWER POLE. MOVE POWER LINES AND REMOVE EXISTING POWER POLES.
   - G. DIG THROUGH ARMORED CONSTRUCTION ROAD, INSTALL SANITARY SEWER, STORM DRAINAGE AND WATER SYSTEM.
   - H. HOLD ON FURTHER WORK UNTIL THE FRONTAGE IS STABILIZED AND APPROVED BY WSDOT AND THE CITY OF ARLINGTON. WHEN APPROVED TEAR DOWN AND REMOVE SETTLING TANKS, PUMPS AND PIPES RUNNING TO ON SITE VAULT.
   - I. INSTALL CURB AND GUTTER, SIDEWALK, RETAINING WALL AND ASPHALT FOR WIDENING SR531. BACKFILL RETAINING WALL AND FINISH GRADE THE FRONTAGE EMBANKMENT.
   - J. PERMANENTLY STABILIZE FRONTAGE SLOPE PER LANDSCAPE PLAN.

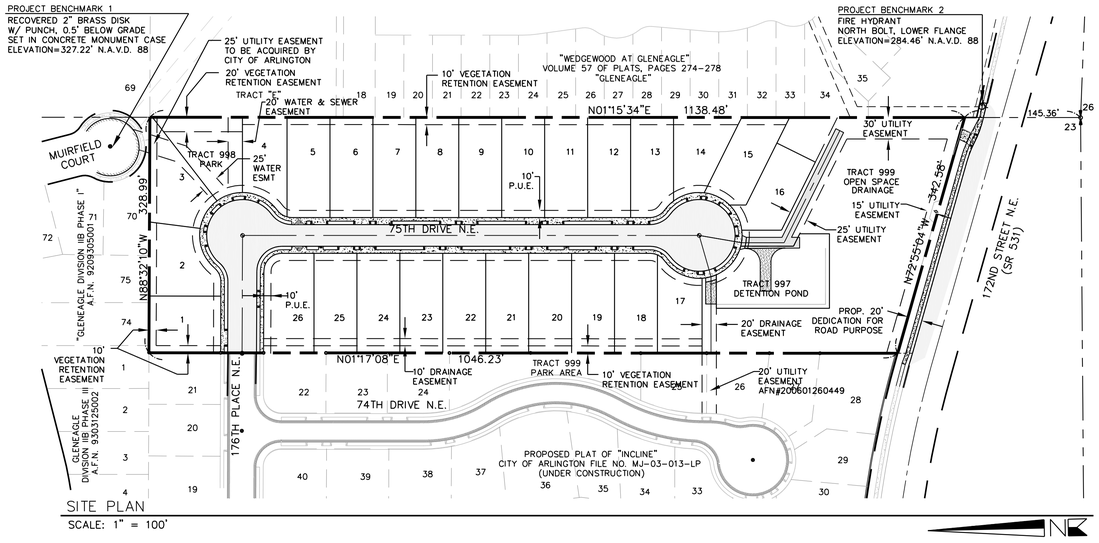

SITE PLAN
SCALE: 1" = 100'

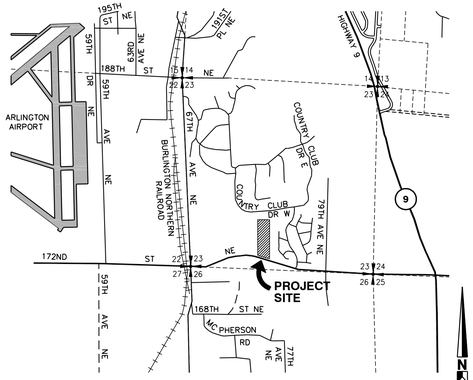

VICINITY MAP
SCALE: 1"=2000'

AS-BUILT DRAWINGS

WE HEREBY DECLARE THAT THE ROAD AND STORM DRAINAGE IMPROVEMENTS ARE LOCATED AS SHOWN ON THESE RECORD DRAWINGS.

BY: _____
PROJECT ENGINEER/SURVEYOR DATE

HBA DOES NOT TAKE RESPONSIBILITY FOR THE ACCURACY OF THE INFORMATION PROVIDED BY THE SURVEYOR, THE CITY OR OTHER SOURCES. HBA DOES TAKE RESPONSIBILITY FOR THE ACCURACY OF THE TRANSCRIPTION OF THE DATA PRODUCED BY OTHERS FOR THE PREPARATION OF THESE ASBUILT PLANS.

SHEET INDEX

SHEET 1	COVER SHEET
SHEET 2	SITE PLAN
SHEET 3	GRADING AND T.E.S.C. PLAN
SHEET 4	172ND STREET N.E. (SR 531) T.E.S.C, POWER POLE RELOCATION AND GRADING PLAN
SHEET 5	GRADING AND T.E.S.C. NOTES AND DETAILS
SHEET 6	ROAD AND STORM DRAINAGE PLAN
SHEET 7	FRONTAGE IMPROVEMENT 172ND STREET N.E. (SR 531)
SHEET 8	ROAD AND STORM DRAINAGE PROFILES
SHEET 9	ROAD AND STORM DRAINAGE PROFILE 172ND STREET N.E. (SR 531)
SHEET 10	CURB RETURN DETAILS, ROAD AND STORM DRAINAGE NOTES AND DETAILS
SHEET 11	DETENTION POND PLAN
SHEET 12	DETENTION POND OUTFALL PROFILE AND SECTIONS
SHEET 13	DETENTION POND AND DETENTION PIPE DETAILS
SHEET 14	CHANNELIZATION AND SIGNING PLAN 172ND STREET N.E. (SR 531 - MP 9.05 VICINITY)
SHEET 15	LANDSCAPE PLAN
SHEET 16	TRACT 998 LANDSCAPE PLAN, DETAILS AND NOTES
SHEET S1	WALL SECTIONS, DETAILS AND NOTES
SHEET S2	RETAINING WALL SITE PLAN DETAILS
SHEET WS-1	COVER SHEET
SHEET WS-2	WATER PLAN
SHEET WS-3	SEWER PLAN
SHEET WS-4	SEWER PROFILES
SHEET WS-5	SEWER PROFILE AT SR 531 SEWER AND WATER NOTES

UTILITY EASEMENTS

THESE UTILITY EASEMENTS HAVE BEEN RESERVED FOR AND GRANTED TO ALL UTILITIES SERVING THE SUBJECT PROPERTY AND THEIR RESPECTIVE SUCCESSORS AND ASSIGNS, UNDER AND UPON THE FRONT TEN FEET PARALLEL WITH AND ADJOINING THE STREET FRONTAGE OF ALL LOTS AND TRACTS IN WHICH TO INSTALL, LAY, CONSTRUCT, RENEW, OPERATE AND MAINTAIN UNDERGROUND CONDUITS, CABLES, PIPES, AND WIRES, TOGETHER WITH THE OTHER NECESSARY FACILITIES AND EQUIPMENT, FOR THE PURPOSE OF SERVING THIS AND OTHER PROPERTY WITH UTILITY SERVICE, TOGETHER WITH THE RIGHT TO ENTER UPON THE PROPERTY AT ALL TIMES FOR THE PURPOSES HEREIN STATED. ALL UTILITY LINES SHALL BE PLACED UNDERGROUND. THESE EASEMENTS ENTERED UPON FOR THESE PURPOSES SHALL BE RESTORED AS NEAR AS POSSIBLE TO THEIR ORIGINAL CONDITION. THESE EASEMENTS SHALL PRECLUDE GRADING OR ANY RECONTOURING OF THE LAND; PLACEMENT OF STRUCTURES, WELLS, LEACH FIELDS, AND ANY OTHER THING; EXCEPT UTILITY FACILITIES.

NPDES SWPPP NOTE

STORMWATER GENERAL PERMIT SO3-006156

THIS CONSTRUCTION PLAN SET, TOGETHER WITH THE ACCOMPANYING WRITTEN DRAINAGE ANALYSIS/SWPPP REPORT, CONSTITUTE A STORMWATER POLLUTION PREVENTION PLAN (SWPPP) PER THE REQUIREMENTS OF SECTION II-4 OF D.O.E.'S PUGET SOUND STORMWATER MANAGEMENT MANUAL. CONTRACTOR SHALL SUBMIT NOTICE OF TERMINATION TO D.O.E. WHEN WORK IS COMPLETE AND SITE IS STABILIZED.

DATUM N.A.V.D. 1988 (BASED ON A G.P.S. TIE TO SNOHOMISH COUNTY CONTROL #1168)

BENCHMARK

BM 1 VERTICAL BENCHMARK = CASED 2" BRASS CAP MONUMENT AT THE CENTER OF MUIRFIELD COURT CUL-DE-SAC.
N.A.V.D. ELEVATION = 327.22'
(FOR CONVERSION TO N.G.V.D. 1929, SUBTRACT 3.73')

BM 2 FIRE HYDRANT
NORTH BOLT, LOWER FLANGE
ELEVATION=284.46' N.A.V.D. 88

OWNER

HIMALAYA HOMES, INC.
9633 MARKET PLACE,
SUITE 201
LAKE STEVENS, WA 98258

Himalaya Homes

APPLICANT

OLIVER LEWIS
HIMALAYA HOMES, INC.
9633 MARKET PLACE,
SUITE 201
LAKE STEVENS, WA 98258

PROJECT ENGINEER

HIGA BURKHOLDER ASSOC., LLC
1721 HEWITT AVENUE,
SUITE 401
EVERETT, WA 98201
(360) 403-4942

PROJECT SURVEYOR

PACE ENGINEERS
750 SIXTH STREET S.
KIRKLAND, WA 98033
(425) 827-2014

GEOTECH ENGINEER

TERRA AND ASSOCIATES
12525 WILLOWS RD.,
SUITE 101
KIRKLAND, WA 98034
(425) 821-7777

TAX ACCOUNT NUMBER

310523-003-013-00

LEGAL DESCRIPTION

THAT PORTION OF THE EAST 10 ACRES OF THE SOUTHEAST QUARTER OF THE SOUTHWEST QUARTER OF SECTION 23, TOWNSHIP 31 NORTH, RANGE 5 EAST, W.M., LYING NORTHERLY OF THE COUNTY ROAD (172 STREET NORTHEAST)

AND EXCEPT THAT PORTION, IF ANY, LYING WITHIN THE WEST HALF OF THE EAST HALF OF THE SOUTHEAST QUARTER OF THE SOUTHWEST QUARTER OF SAID SECTION 23

SITUATED IN THE COUNTY OF SNOHOMISH, STATE OF WASHINGTON.

CITY OF ARLINGTON

AS-BUILT CONSTRUCTION DRAWING REVIEW ACKNOWLEDGEMENT

THIS AS-BUILT PLAN SHEET HAS BEEN REVIEWED AND ACCEPTED AS A RECORD DRAWING. THE LICENSED DESIGN ENGINEER WHOSE STAMP AND SIGNATURE APPEAR ON THIS SHEET ASSUMES FULL AND COMPLETE RESPONSIBILITY FOR THE ACCURACY THEREIN.

BY: _____
CITY ENGINEER

DATE: _____ / _____ / _____

CONSTRUCTION DRAWING REVIEW ACKNOWLEDGEMENT

THIS PLAN SHEET HAS BEEN REVIEWED AND EVALUATED FOR GENERAL COMPLIANCE WITH THE CITY OF ARLINGTON CODES AND ORDINANCES. CONFORMANCE OF THIS DESIGN WITH ALL APPLICABLE LAWS AND REGULATIONS IS THE FULL AND COMPLETE RESPONSIBILITY OF THE LICENSED DESIGN ENGINEER, WHOSE STAMP AND SIGNATURE APPEAR ON THIS SHEET. ACKNOWLEDGEMENT OF CONSTRUCTION DRAWING REVIEW DOES NOT IMPLY CITY APPROVAL FOR CONSTRUCTION ACTIVITIES THAT REQUIRE OTHER COUNTY, STATE OR FEDERAL PERMIT REVIEW AND APPROVAL. THE PROPERTY OWNER AND LICENSED DESIGN ENGINEER SHALL BE RESPONSIBLE FOR THE ACQUISITION AND COMPLIANCE OF ALL APPLICABLE PERMITS AND/OR AUTHORIZATIONS WHICH MAY INCLUDE, BUT ARE NOT LIMITED TO, WSDFW HYDRAULIC PROJECT APPROVAL (HPA), WSDOE NOTICE OF INTENT (NOI), ANY CORP OF ENGINEERS FILL PERMITS AND THE REQUIREMENTS OF THE ENDANGERED SPECIES ACT.

BY: _____
CITY ENGINEER

DATE: _____ / _____ / _____
THIS APPROVAL VALID FOR 18 MONTHS

HIGA-BURKHOLDER ASSOCIATES, LLC
LAND USE PLANNING / CIVIL ENGINEERING
1721 Hewitt Avenue ■ Suite 401
Everett, Washington 98201
(425) 252-2828 Telephone
(425) 252-9551 Fax
150 North Seventh Street
Springfield, Oregon 97477
Telephone (541) 988-1862
Fax (541) 988-1863

JAMES A. KREGGE — STATE OF WASHINGTON — 15781 — REGISTERED PROFESSIONAL ENGINEER
EXPIRES 3/17/2008

CALL 48 HOURS BEFORE YOU DIG 1-800-424-5555

DATE	REVISIONS	BY
07/05/05	REVISED PER CITY REVIEW	BOM
08/24/05	REVISED PER CITY REVIEW	BOM
02/15/06	REVISED PER CITY REVIEW	JAK
04/21/06	REVISED PER CITY REVIEW	JAK
11/30/06	REVISED PER AS-BUILT	JAK
12/28/06	REVISED PER AS-BUILT	JAK
1/25/07	EDITS PER A-B COMMENTS	JAK

PLAN DATE: 12/16/04
DESIGNED BY: MPG
DRAWN BY: RLM
PLAN CHECK BY: JAK

1ST SUBMITTAL: 01/05/05
2ND SUBMITTAL: 07/06/05
3RD SUBMITTAL: 02/15/06
4TH SUBMITTAL 04/21/06

CONSTRUCTION PLANS
EAGLECREST VIEW
COVER SHEET

JOB NO. 1771C
1/16

XREF: MORISC.DWG

SOUTHWEST 1/4 OF SECTION 23, TOWNSHIP 31 NORTH, RANGE 5 EAST, W.M.

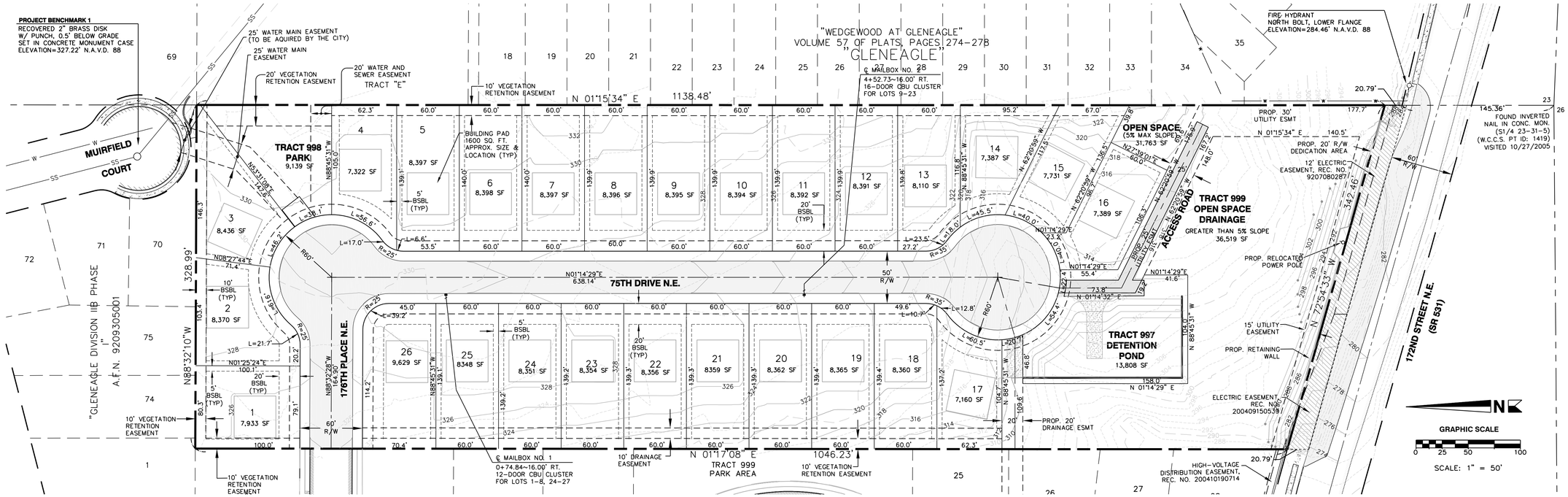

SITE PLAN

SCALE: 1"= 50'

LEGEND

- EXISTING CONTOURS MAJOR
- EXISTING CONTOURS MINOR
- PROPOSED CONTOURS MAJOR
- PROPOSED CONTOURS MINOR

APPROVED AS NOTED BY THE ARLINGTON POST OFFICE
SMOKEY POINT BRANCH
JOSEPH NORRIS, POSTMASTER
SUPERVISOR COST SERVICES
DATE

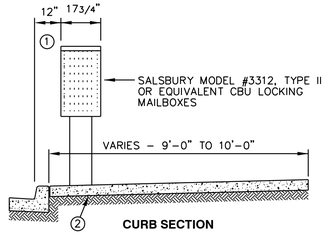

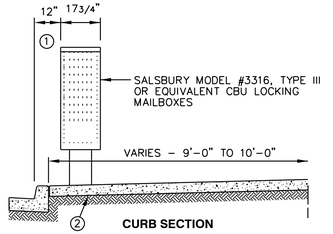

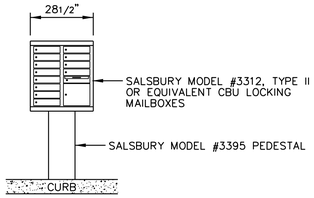

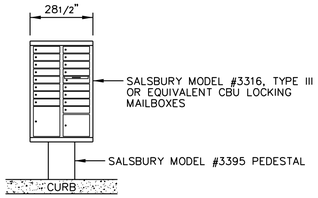

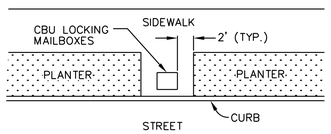

NOTES:

1. MAILBOXES MUST BE POSTMASTER APPROVED WITH A UNIFORM BOX STYLE AND METHOD OF ADDRESS IDENTIFICATION.
2. CLUSTER BOX UNITS (CBU'S) INCLUDING PEDESTAL, BREAKAWAY BOLTS AND ASSOCIATED CONCRETE SLAB SHALL BE INSTALLED BY THE U.S. POSTAL SERVICE.
3. LOCATIONS OF MAILBOXES ARE SUBJECT TO APPROVAL BY THE CITY OF ARLINGTON POST OFFICE FOR PROTECTION OF VIEWS AND ACCESS.

DETAIL
12 AND 16-DOOR CLUSTER BOX UNIT - CBU LOCKED BOXES
NOT TO SCALE

DATUM
BENCHMARK

N.A.V.D. 1988 (BASED ON A G.P.S. TIE TO SNOHOMISH COUNTY CONTROL #1168)

BM 1 VERTICAL BENCHMARK = CASED 2" BRASS CAP MONUMENT AT THE CENTER OF MUIRFIELD COURT CUL-DE-SAC.
N.A.V.D. ELEVATION = 327.22'
(FOR CONVERSION TO N.G.V.D. 1929, SUBTRACT 3.73')

BM 2 FIRE HYDRANT
NORTH BOLT, LOWER FLANGE
ELEVATION=284.46' N.A.V.D. 88

AS-BUILT DRAWINGS

CITY OF ARLINGTON FILE NO. C-04-056-LP

HIGA-BURKHOLDER ASSOCIATES, LLC
LAND USE PLANNING / CIVIL ENGINEERING
1721 Hewitt Avenue ■ Suite 401
Everett, Washington 98201
(425) 252-2828 Telephone
(425) 252-9551 Fax
150 North Seventh Street
Springfield, Oregon 97477
Telephone (541) 988-1862
Fax (541) 988-1863

JAMES A. KREGGE — STATE OF WASHINGTON — 19751 — REGISTERED PROFESSIONAL ENGINEER
EXPIRES 3/17/2008

CITY OF ARLINGTON
THIS SHEET HAS BEEN APPROVED PER CONDITIONS ON THE COVER SHEET

CONSTRUCTION	AS-BUILT ACKNOWLEDGEMENT
BY: _____ CITY ENGINEER	BY: _____ CITY ENGINEER
DATE: ____ /____ /____	DATE: ____ /____ /____

CALL 48 HOURS BEFORE YOU DIG 1-800-424-5555

DATE	REVISIONS	BY
07/05/05	REVISED PER CITY REVIEW	BOM
08/24/05	REVISED PER CITY REVIEW	BOM
02/15/06	REVISED PER CITY REVIEW	JAK
04/21/06	REVISED PER CITY REVIEW	JAK
11/30/06	REVISED PER AS-BUILT	JAK
12/28/06	REVISED PER AS-BUILT	JAK
1/25/07	EDITS PER A-B COMMENTS	JAK

PLAN DATE:	10/29/04
DESIGNED BY:	MPG
DRAWN BY:	RLM
PLAN CHECK BY:	JAK
1ST SUBMITTAL:	01/05/05
2ND SUBMITTAL:	07/06/05
3RD SUBMITTAL:	02/15/06
4TH SUBMITTAL	04/21/06

CONSTRUCTION PLANS

EAGLECREST VIEW

SITE PLAN

JOB NO. 1771C

2 / 16

XREF: MORISC.DWG

SOUTHWEST 1/4 OF SECTION 23, TOWNSHIP 31 NORTH, RANGE 5 EAST, W.M.

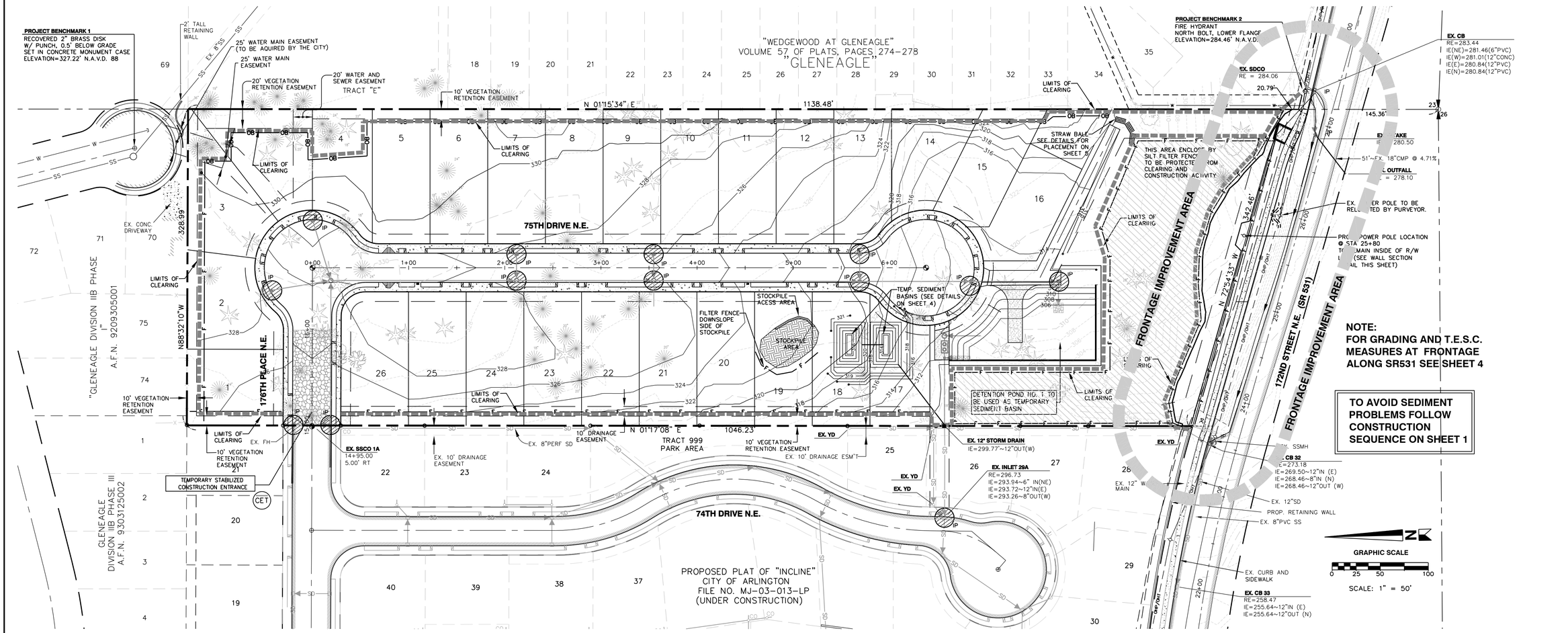

GRADING AND T.E.S.C. PLAN

SCALE: 1" – 50'

T.E.S.C. AND WATER QUALITY NOTE

FOR EROSION CONTROL AND WATER QUALITY RESPONSIBILITIES, SEE SHEET 5 FOR T.E.S.C. GENERAL NOTES (ESPECIALLY NOTE #4) AND CONTRACTOR RESPONSIBILITY FOR EROSION/SILTATION CONTROL.

GRADING QUANTITIES

CUT: 18,500 CU. YDS. (13,000 CY PLAT + 5,200 CY FRONTAGE)
FILL: 5,300 CU. YDS. (5,200 CY PLAT + 100 CY FRONTAGE)

THE QUANTITIES OF CUT AND FILL ARE APPROXIMATE AND ARE SHOWN ONLY FOR THE PURPOSES OF OBTAINING A GRADING PERMIT AND SHALL NOT BE USED FOR CONTRACTUAL PURPOSES.

UNDERGROUND UTILITY NOTE

EX. UNDERGROUND UTILITY LOCATIONS SHOWN HEREON ARE BASED UPON SURFACE INDICATORS. NO UNDERGROUND LOCATE SERVICE WAS UTILIZED FOR THEIR LOCATION. THE USE OF THIS MAP FOR THEIR EXACT LOCATION IS NOT WARRANTED. PRIOR TO CONSTRUCTION, USER SHOULD CALL THE UTILITY LOCATE SERVICE AT 1-800-424-5555, 48 HOURS BEFORE CONSTRUCTION.

SOIL TYPE AND GROUND COVER

TOKUL GRAVELLY LOAM WITH SOME TOKUL-WINSTON GRAVELLY LOAM IN SOUTHERN QUARTER OF THE SITE. GROUND COVER IS MOSTLY SECOND-GROWTH FOREST WITH A SMALL PORTION CONSISTING OF GRASSES AND SHRUBS.

SITE GRADING NOTES

1. ALL GRADING SHALL COMPLY WITH CHAPTER A33 OF THE UNIFORM BUILDING CODE (CURRENT EDITION), AND APPLICABLE CITY OF ARLINGTON CODES.
2. PUBLIC STREETS ARE TO BE KEPT CLEAR OF DIRT AND DEBRIS DURING EXCAVATION AND FILL OPERATIONS.
3. AREAS TO RECEIVE FILL SHALL BE CLEARED OF ALL VEGETATION AND DELETERIOUS MATTER.
4. AREAS TO RECEIVE FILL SHALL BE PROOF ROLLED. ALL LOOSE AND SOFT AREAS SHALL BE REMOVED AND REPLACED WITH STRUCTURAL FILL.
5. ALL FILL MATERIALS USED SHALL BE FREE OF VEGETATION AND DELETERIOUS MATTER AND SHALL NOT CONTAIN ROCKS GREATER THAN SIX INCHES IN DIAMETER.
6. STRUCTURAL FILLS SHALL BE PLACED IN EIGHT TO 10 INCH THICK LOOSE HORIZONTAL LIFTS AND SPREAD UNIFORMLY.
7. AFTER EACH LIFT HAS BEEN SPREAD EVENLY, IT SHALL BE COMPACTED TO A MINIMUM OF 95% OF MAXIMUM DENSITY DETERMINED IN ACCORDANCE WITH ASTM D1557 (MODIFIED PROCTOR).
8. THE SURFACE OF ALL SLOPES SHALL BE COMPACTED. THIS MAY BE ACCOMPLISHED BY OVER-BUILDING THE SLOPES, THEN CUTTING BACK TO FINAL GRADES, OR BY RUNNING THE COMPACTOR OVER THE SLOPE AS EACH FILL LIFT IS BEING PLACED. ALL SLOPES SHALL BE COMPACTED BY THE END OF EACH WORK DAY.
9. FIELD DENSITY TESTS (IF REQUIRED) WILL BE MADE BY A QUALIFIED SOILS ENGINEERING FIRM. DENSITY TESTS SHALL BE TAKEN AT OR JUST BELOW THE SURFACE AT THE FREQUENCY AND LOCATIONS DETERMINED BY THE SOILS ENGINEERING FIRM. WHEN THE TESTS INDICATE THAT THE DENSITY OF ANY LAYER OF FILL OR PORTION THEREOF IS BELOW THE SPECIFIED DENSITY, THE PARTICULAR SECTION SHALL BE REWORKED UNTIL THE REQUIRED DENSITY HAS BEEN OBTAINED.
10. ALL CUT AND FILL SLOPES SHALL BE A MAXIMUM OF 2:1.
11. STOCKPILES ARE TO BE LOCATED IN SAFE AREAS AND ADEQUATELY PROTECTED TO PREVENT EROSION. HYDROSEED PREFERRED.
12. CONTRACTOR SHALL MAINTAIN A MINIMUM 2-FT GRADING SETBACK FROM PROPERTY BOUNDARY UNLESS WRITTEN PERMISSION IS OBTAINED FROM ADJACENT PROPERTY OWNER.
13. EXCESS MATERIAL MAY BE SPREAD EVENLY ACROSS SITE, PROVIDED IT DOES NOT INTERFERE WITH OR HINDER THE DRAINAGE PATTERN ESTABLISHED ON THE GRADING PLANS.
14. CONTRACTOR SHALL MAINTAIN A MINIMUM SLOPE OF 0.5% ACROSS AT ALL TIMES.

AS-BUILT DRAWINGS

VEGETATION PROTECTION NOTES

1. CONTRACTOR TO MINIMIZE DISTURBANCE OF EXISTING VEGETATION DURING MITIGATION TREE PLANTING
2. CLEAR ONLY AREAS NEEDED TO DEVELOPE ROAD SYSTEM THEN WHEN DRAINAGE SYSTEM IS STABILIZED THE LOT AREAS CAN BE CLEARED. (SEE CONSTRUCTION SEQUENCE ON SHEET 1).
3. PLACE AN ORANGE CONSTRUCTION BARRIER FENCE AROUND SIGNIFICANT TRESS AS IDENTIFIED BY THE ARBORIST AND/OR THIS PLAN SET. IDENTIFY THESE TREE IN A WAY SO THERE IS NO DOUBT THAT "**THESE TREES ARE TO REMAIN**".

PROPOSED SEDIMENT BASIN NO. 1

DRAINAGE AREA:	6.80 ACRES
SURFACE AREA REQUIRED:	2,354 SF
SURFACE AREA PROVIDED:	3,726 SF
BOTTOM DIMENSIONS:	43 FT. x 44 FT.
BOTTOM ELEVATION:	306.00
CREST OF 12" STANDPIPE:	309.00
TOP OF BERM ELEVATION:	311.00

OUTLET STRUCTURES FOR PROPOSED DETENTION POND TO ALSO BE USED FOR THE SEDIMENT BASIN DISCHARGE.

PROPOSED DETENTION POND CAN BE USED AS SEDIMENT BASIN DURING CONSTRUCTION.

LEGEND

- EX. TRAFFIC SIGN
- EX. WATER METER
- EX. MAILBOX
- EX. FIRE HYDRANT
- EX. TELEPHONE RISER
- EX. POWER POLE
- EXISTING ASPHALT PAVEMENT
- EXISTING TELEPHONE CONDUIT
- EXISTING OVERHEAD POWER
- EXISTING WATER
- EXISTING CONTOURS MAJOR
- EXISTING CONTOURS MINOR
- PROPOSED CONTOURS MAJOR
- PROPOSED CONTOURS MINOR
- PROPERTY BOUNDARY
- TEMP. FILTER FENCE PER CITY STD. PLAN NO. G11
- TEMP. ORANGE CONST. LIMITS BARRIER FENCE
- TEMP. STABILIZED CONST. ENTRANCE PER CITY STD. PLAN NO. G12
- INLET PROTECTION BLOCK AND GRAVEL FILTER PER CITY STD. PLAN NO. G8
- ROCK CHECK DAM PER CITY STD. PLAN NO. G5
- STRAW BALE
- LIMITS OF CLEARING
- FIR
- CEDAR
- ALDER
- BIRCH
- MAPLE

DATUM
BENCHMARK BM 1 VERTICAL BENCHMARK = CASED 2" BRASS CAP MONUMENT AT THE CENTER OF MUIRFIELD COURT CUL-DE-SAC. N.A.V.D. ELEVATION = 327.22' (FOR CONVERSION TO N.G.V.D. 1929, SUBTRACT 3.73')

BM 2 FIRE HYDRANT NORTH BOLT, LOWER FLANGE ELEVATION=284.46' N.A.V.D. 88

N.A.V.D. 1988 (BASED ON A G.P.S. TIE TO SNOHOMISH COUNTY CONTROL #1168)

CITY OF ARLINGTON FILE NO. C-04-056-LP

HIGA-BURKHOLDER ASSOCIATES, LLC
LAND USE PLANNING / CIVIL ENGINEERING
1721 Hewitt Avenue ■ Suite 401
Everett, Washington 98201
(425) 252-2828 Telephone
(425) 252-9551 Fax
150 North Seventh Street
Springfield, Oregon 97477
Telephone (541) 988-1862
Fax (541) 988-1863

JAMES A. KREGGE — STATE OF WASHINGTON — 19781 — REGISTERED PROFESSIONAL ENGINEER
EXPIRES 3/17/2008

CITY OF ARLINGTON
THIS SHEET HAS BEEN APPROVED PER CONDITIONS ON THE COVER SHEET

CONSTRUCTION	AS-BUILT ACKNOWLEDGEMENT
BY: _____ CITY ENGINEER	BY: _____ CITY ENGINEER
DATE: ____/____/____	DATE: ____/____/____

CALL 48 HOURS BEFORE YOU DIG 1-800-424-5555

DATE	REVISIONS	BY
07/05/05	REVISED PER CITY REVIEW	BOM
08/24/05	REVISED PER CITY REVIEW	BOM
02/15/06	REVISED PER CITY REVIEW	JAK
04/21/06	REVISED PER CITY REVIEW	JAK
11/30/06	REVISED PER AS-BUILT	JAK
12/28/06	REVISED PER AS-BUILT	JAK
1/25/07	EDITS PER A-B COMMENTS	JAK

PLAN DATE: 12/16/04
DESIGNED BY: MPG
DRAWN BY: RLM
PLAN CHECK BY: JAK

1ST SUBMITTAL: 01/05/05
2ND SUBMITTAL: 07/06/05
3RD SUBMITTAL: 02/15/06
4TH SUBMITTAL 04/21/06

CONSTRUCTION PLANS
EAGLECREST VIEW
GRADING AND T.E.S.C. PLAN

JOB NO. 1771C
3/16
XREF: - MORISC.DWG

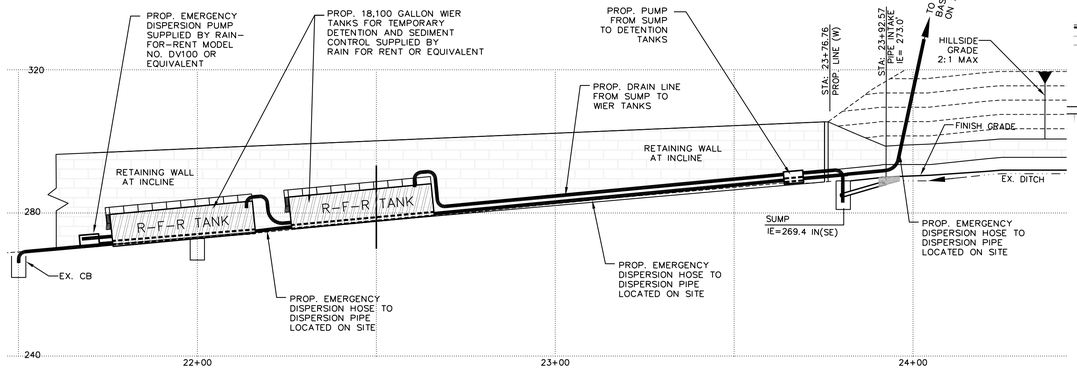

FRONTAGE TEMPORARY DRAINAGE SYSTEM PROFILE

SCALE: 1" = 20' VERTICAL
1" = 20' HORIZONTAL

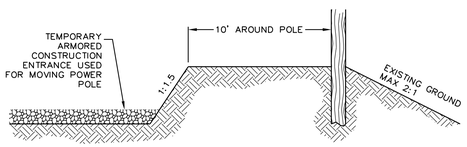

ARMORED ENTRY INSTALLATION DETAIL AT POWER POLE

SCALE: N.T.S.

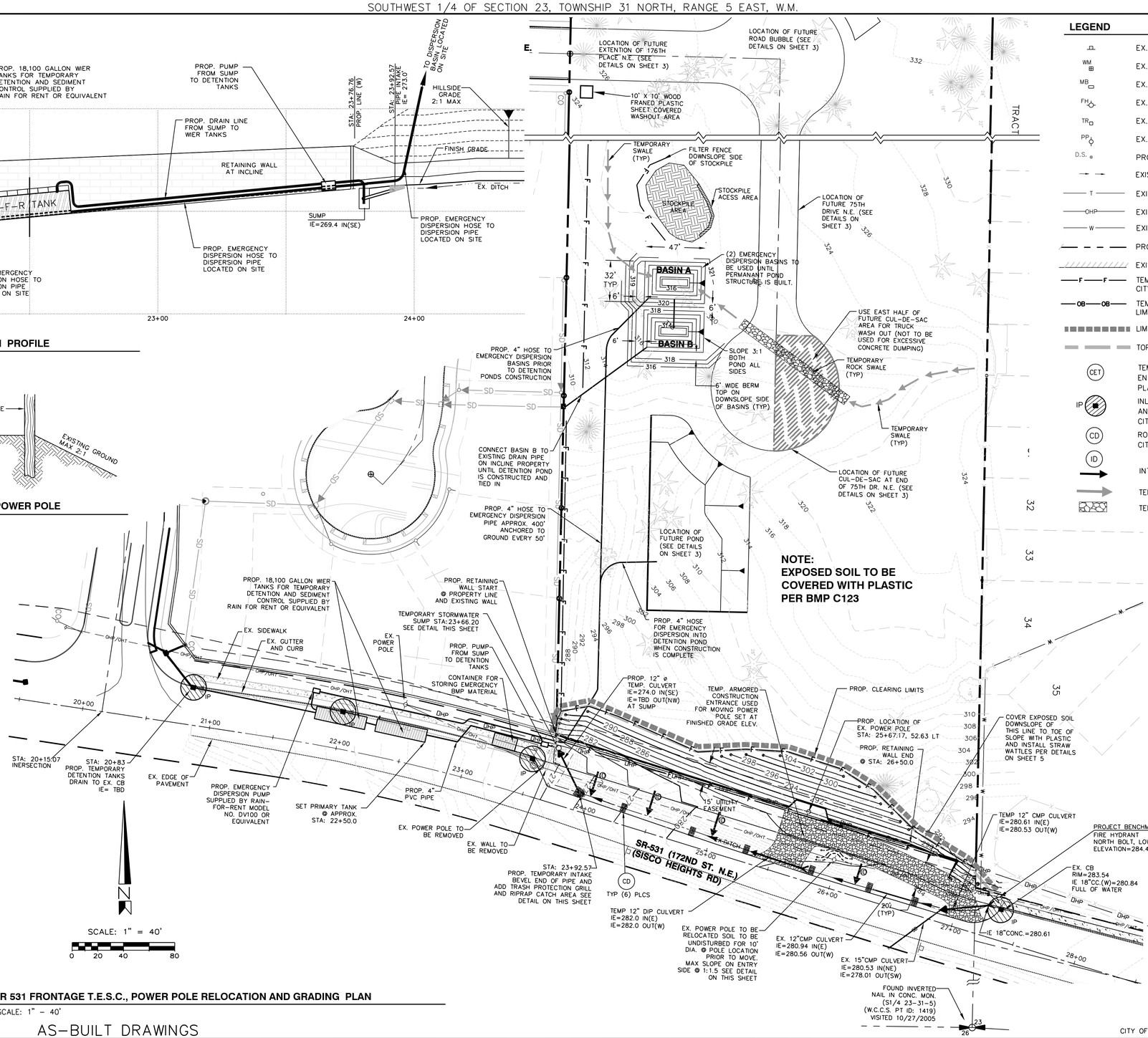

SR 531 FRONTAGE T.E.S.C., POWER POLE RELOCATION AND GRADING PLAN

SCALE: 1" = 40'

AS-BUILT DRAWINGS

LEGEND

- EX. TRAFFIC SIGN
- EX. WATER METER
- EX. MAILBOX
- EX. FIRE HYDRANT
- EX. TELEPHONE RISER
- EX. POWER POLE
- PROPOSED DOWNSPOUT
- EXISTING DRAINAGE FLOW
- EXISTING TELEPHONE CONDUIT
- EXISTING OVERHEAD POWER
- EXISTING WATER
- PROPERTY BOUNDARY
- EXISTING ASPHALT PAVEMENT
- TEMP. FILTER FENCE PER CITY STD. PLAN NO. G11
- TEMP. ORANGE CONST. LIMITS BARRIER FENCE
- LIMITS OF CLEARING
- TOP OF PROPOSE GRADING
- CET — TEMP. STABILIZED CONST. ENTRANCE PER CITY STD. PLAN NO. G12
- IP — INLET PROTECTION BLOCK AND GRAVEL FILTER PER CITY STD. PLAN NO. G8
- CD — ROCK CHECK DAM PER CITY STD. PLAN NO. G5
- ID — INTERCEPTOR DIKE
- TEMPORARY DRAINAGE SWALE
- TEMPORARY CRUSHED ROCK SWALE
- EX. FIR
- EX. CEDAR
- EX. ALDER
- EX. BIRCH
- EX. MAPLE

NOTE

FOR EROSION CONTROL AND WATER QUALITY RESPONSIBILITIES, SEE SHEET 4 FOR T.E.S.C. GENERAL NOTES (ESPECIALLY NOTE #4) AND CONTRACTOR RESPONSIBILITY FOR EROSION/SILTATION CONTROL.

GRADING QUANTITIES

CUT: 5,200 CU. YDS.
FILL: 100 CU. YDS.

THE QUANTITIES OF CUT AND FILL ARE APPROXIMATE AND ARE SHOWN ONLY FOR THE PURPOSES OF OBTAINING A GRADING PERMIT AND SHALL NOT BE USED FOR CONTRACTUAL PURPOSES.

UNDERGROUND UTILITY NOTE

EX. UNDERGROUND UTILITY LOCATIONS SHOWN HEREON ARE BASED UPON SURFACE INDICATORS. NO UNDERGROUND LOCATE SERVICE WAS UTILIZED FOR THEIR LOCATION. THE USE OF THIS MAP FOR THEIR EXACT LOCATION IS NOT WARRANTED. PRIOR TO CONSTRUCTION, USER SHOULD CALL THE UTILITY LOCATE SERVICE AT 1-800-424-5555, 48 HOURS BEFORE CONSTRUCTION.

SOIL TYPE AND GROUND COVER

TOKUL GRAVELLY LOAM WITH SOME TOKUL-WINSTON GRAVELLY LOAM IN SOUTHERN QUARTER OF THE SITE. GROUND COVER IS MOSTLY SECOND-GROWTH FOREST WITH A SMALL PORTION CONSISTING OF GRASSES AND SHRUBS.

DATUM

BENCHMARK BM 1 — VERTICAL BENCHMARK = CASED 2" BRASS CAP MONUMENT AT THE CENTER OF MUIRFIELD COURT CUL-DE-SAC. N.A.V.D. ELEVATION = 327.22'
(FOR CONVERSION TO N.G.V.D. 1929, SUBTRACT 3.73')

BM 2 — FIRE HYDRANT NORTH BOLT, LOWER FLANGE ELEVATION=284.46' N.A.V.D. 88

N.A.V.D. 1988 (BASED ON A G.P.S. TIE TO SNOHOMISH COUNTY CONTROL #1168)

CITY OF ARLINGTON FILE NO. C-04-056-LP

HIGA-BURKHOLDER ASSOCIATES, LLC
LAND USE PLANNING / CIVIL ENGINEERING
1721 Hewitt Avenue ■ Suite 401
Everett, Washington 98201
(425) 252-2828 Telephone
(425) 252-9551 Fax
150 North Seventh Street
Springfield, Oregon 97477
Telephone (541) 988-1862
Fax (541) 988-1863

JAMES A. KRESGE — STATE OF WASHINGTON — 19781 — REGISTERED PROFESSIONAL ENGINEER
EXPIRES 3/15/2008

THIS SHEET HAS BEEN APPROVED PER CONDITIONS ON THE COVER SHEET

CONSTRUCTION	AS-BUILT ACKNOWLEDGEMENT
BY: _____ CITY ENGINEER	BY: _____ CITY ENGINEER
DATE: ____/____/____	DATE: ____/____/____

CALL 48 HOURS BEFORE YOU DIG 1-800-424-5555

DATE	REVISIONS	BY
07/05/05	REVISED PER CITY REVIEW	BOM
08/24/05	REVISED PER CITY REVIEW	BOM
02/15/06	REVISED PER CITY REVIEW	JAK
04/21/06	REVISED PER CITY REVIEW	JAK
11/30/06	REVISED PER AS-BUILT	JAK
12/28/06	REVISED PER AS-BUILT	JAK
1/25/07	EDITS PER A-B COMMENTS	JAK

PLAN DATE: 12/16/04
DESIGNED BY: MPG
DRAWN BY: RLM
PLAN CHECK BY: JAK

1ST SUBMITTAL: 01/05/05
2ND SUBMITTAL: 07/06/05
3RD SUBMITTAL: 02/15/06
4TH SUBMITTAL 04/21/06

CONSTRUCTION PLANS
EAGLECREST VIEW
SR 531 T.E.S.C., POWER POLE RELOCATION AND GRADING PLAN

JOB NO. 1771C
4 / 16

XREF: MORISC.DWG

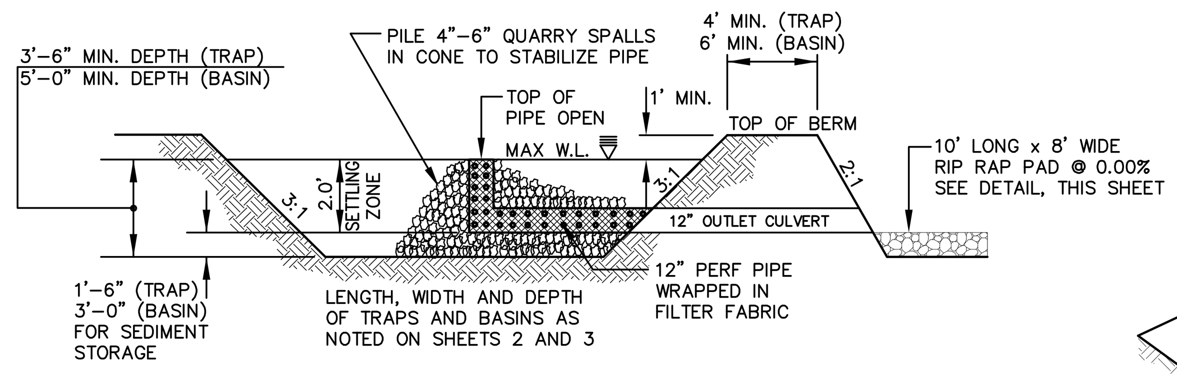

NOTE: CONTRACTOR SHALL MONITOR SEDIMENT ACCUMULATION IN POND & REMOVE EXCESS AS NECESSARY TO ENSURE EFFECTIVENESS OF OUTLET FILTER.

TEMPORARY SEDIMENT TRAP AND SEDIMENT BASIN WITH FILTER OUTLET

NOT TO SCALE

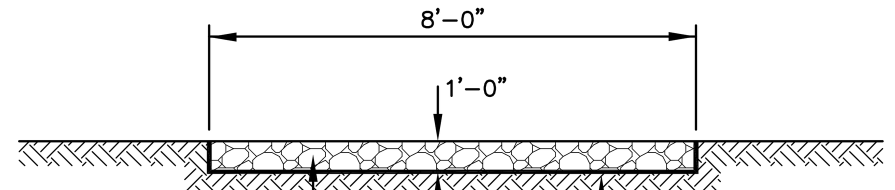

DETAIL RIP RAP PAD

NOT TO SCALE

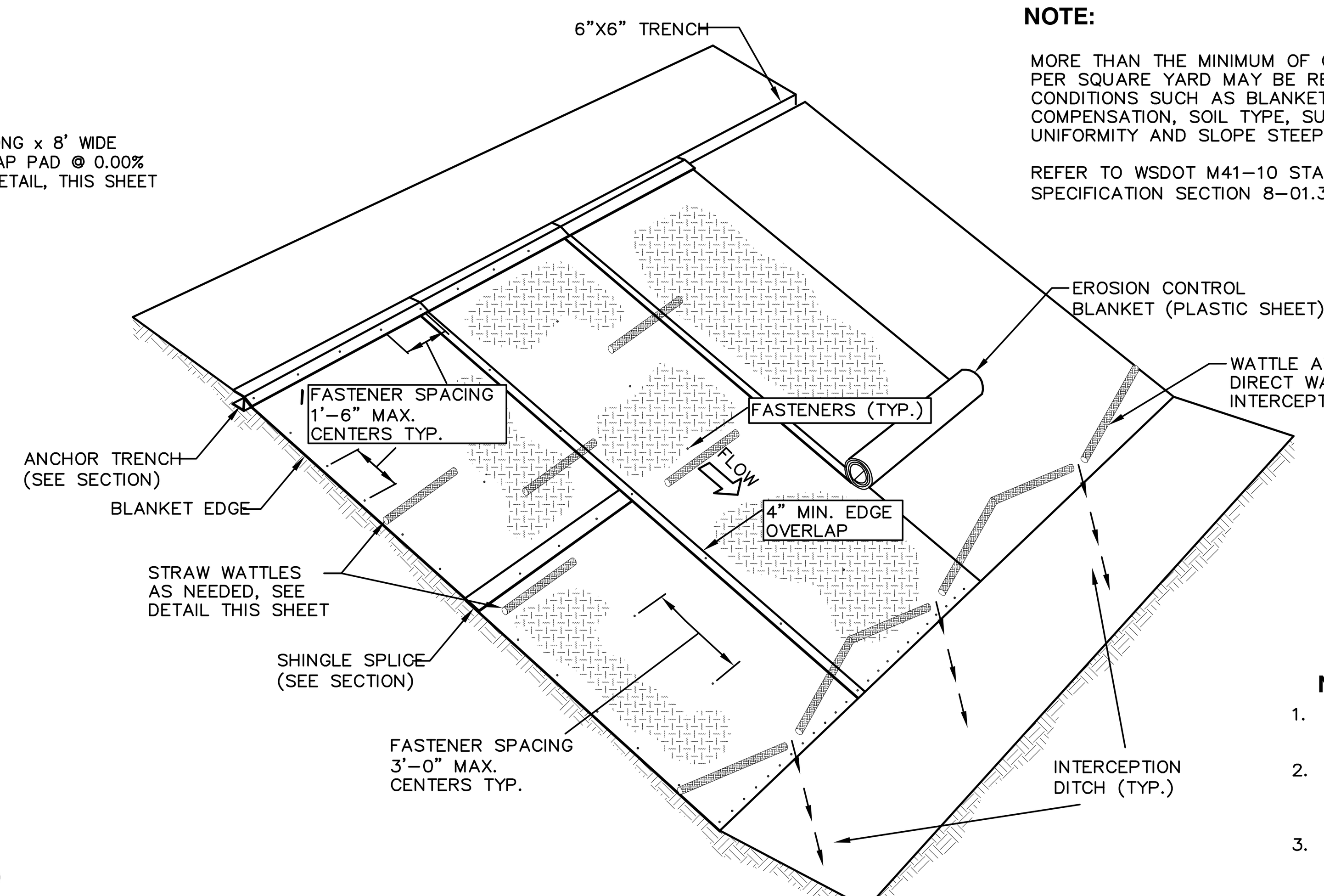

SLOPE PROTECTION DETAIL

NOT TO SCALE

NOTE:

MORE THAN THE MINIMUM OF ONE FASTENER PER SQUARE YARD MAY BE REQUIRED DUE TO CONDITIONS SUCH AS BLANKET COMPENSATION, SOIL TYPE, SURFACE UNIFORMITY AND SLOPE STEEPNESS.

REFER TO WSDOT M41-10 STANDARD SPECIFICATION SECTION 8-01.3(3).

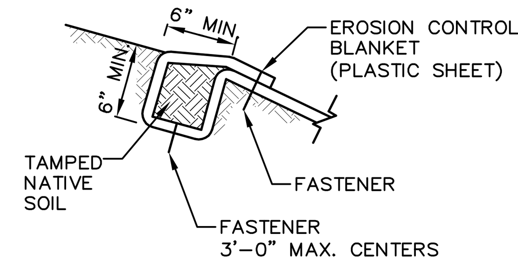

ANCHOR TRENCH SECTION

NOT TO SCALE

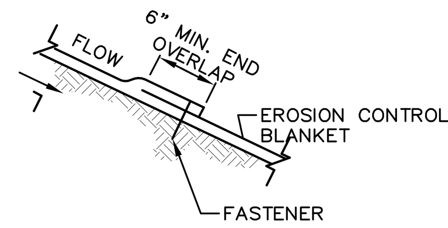

SHINGLE SPLICE SECTION

NOT TO SCALE

NOTE:

1. INSTALL WATTLES ALONG CONTOURS BEGINNING AT THE BASE OFTHE SLOPE AND WORKING UPHILL
2. SPREAD MATERIAL EXCAVATED FROM TRENCH CONSTRUCTION EVENLY ON THE UPHILL SLOPE. COMPACT BY HAND TAMPING.
3. INSTALL WATTLES SNUGLY INTO THE TRENCH. ABUT ADJACENT WATTLES TIGHTLY, END TO END, WITHOUT OVERLAPPING THE ENDS.
4. LIVE STAKES MAY BE USED FOR PERMANENT INSTALLATIONS.
5. PILOT HOLES MAY BE DRIVEN THROUGH THE WATTLE AND INTO THE SOIL, WHEN SOIL CONDITIONS REQUIRE.
6. WATTLES SHALL BE INSPECTED REGULARLY, AND IMMEDIATELY AFTER A RUNOFF PRODUCING RAINFALL, TO ENSURE THEY REMAIN THROUGHLY ENTRENCHED AND IN CONTACT WITH THE SOIL.
7. PERFORM MAINTENANCE ON EROSION CONTROL DEVICES AS REQUIRED TO MAINTAIN PROPER FUNCTIONALITY. REFER TO WSDOT M41-10 STANDARD SPECIFICATIONS 8-01.3(15).

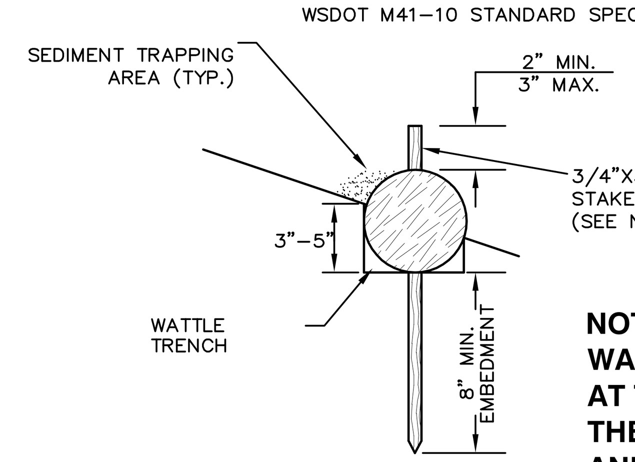

WATTLE DETAIL

NOT TO SCALE

NOTE:
WATTLES MAY BE OMITTED AT THE DESCRETION OF THE CERTIFIED EROSION AND SEDIMENT CONTROL LEAD (C.E.S.C.L)

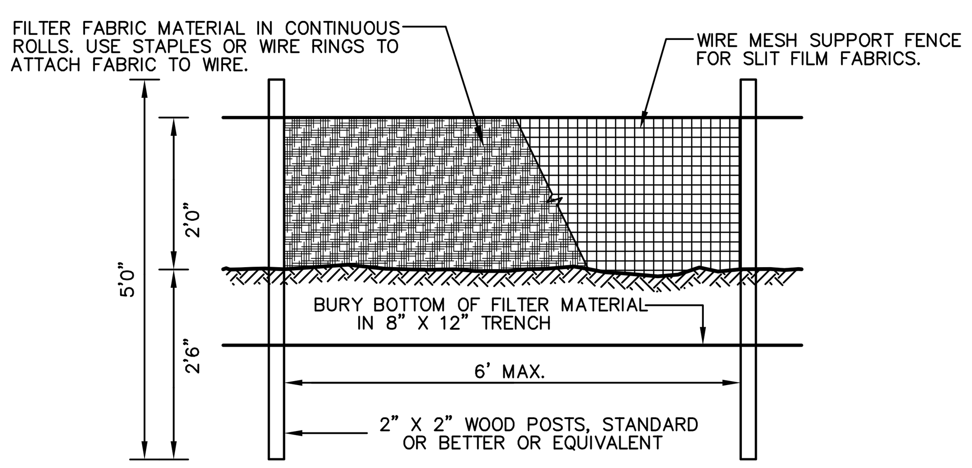

ELEVATION

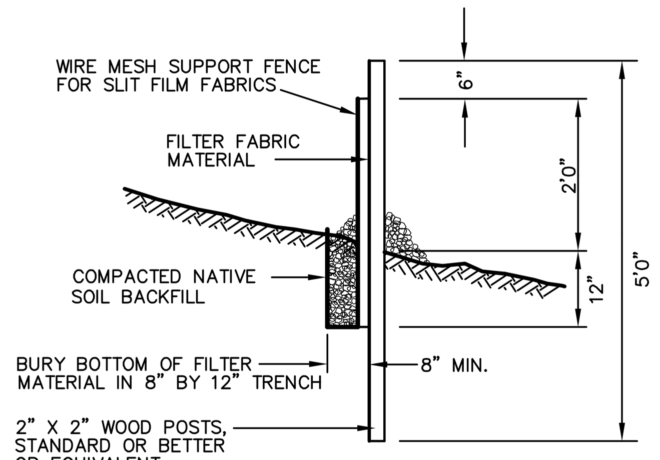

SECTION

NOTE:
TRIANGULAR DIKE MAY BE SUBSTITUTED FOR STRAW BALES AT THE DESCRETION OF THE CERTIFIED EROSION AND SEDIMENT CONTROL LEAD (C.E.S.C.L.)

TEMPORARY FILTER FABRIC FENCE

1. THE FILTER FABRIC SHALL BE PURCHASED IN A CONTINUOUS ROLL AND CUT TO THE LENGTH OF THE BARRIER TO AVOID USE OF JOINTS. WHEN JOINTS ARE NECESSARY, FILTER CLOTH SHALL BE SPLICED TOGETHER ONLY AT A SUPPORT POST, WITH A MINIMUM 6 INCH OVERLAP, AND BOTH ENDS SECURELY FASTENED TO THE POST.
2. POSTS SHALL BE SPACED A MAXIMUM OF 6 FEET APART AND DRIVEN SECURELY INTO THE GROUND A MINIMUM OF 30 INCHES (WHERE PHYSICALLY POSSIBLE).
3. A TRENCH SHALL BE EXCAVATED APPROXIMATELY 8 INCHES WIDE AND 12 INCHES DEEP ALONG THE LINE OF POSTS AND UPSLOPE FROM THE BARRIER. THE TRENCH SHALL BE CONSTRUCTED TO FOLLOW THE CONTOUR.
4. WHEN SLIT FILM FILTER FABRIC IS USED, A WIRE MESH SUPPORT FENCE SHALL BE FASTENED SECURELY SECURELY TO THE UPSLOPE SIDE OF THE POSTS USING HEAVY-DUTY WIRE STAPLES AT LEAST 1 INCH LONG, TIE WIRES OR HOG RINGS. THE WIRE SHALL EXTEND INTO THE TRENCH A MINIMUM OF 4 INCHES AND SHALL NOT EXTEND MORE THAN 36 INCHES ABOVE THE ORIGINAL GROUND SURFACE.
5. SLIT FILM FILTER FABRIC SHALL BE WIRED TO THE FENCE, AND 20 INCHES OF THE FABRIC SHALL EXTEND INTO THE TRENCH. THE FABRIC SHALL NOT EXTEND MORE THAN 36 INCHES ABOVE THE ORIGINAL GROUND SURFACE. FILTER FABRIC SHALL NOT BE STAPLED TO EXISTING TREES. OTHER TYPES OF FABRIC MAY BE STAPLED TO THE FENCE.
6. WHEN EXTRA-STRENGTH OR MONOFILAMENT FABRIC AND CLOSER POST SPACING ARE USED, THE WIRE MESH SUPPORT FENCE MAY BE ELIMINATED. IN SUCH A CASE, THE FILTER FABRIC IS STAPLED OR WIRED DIRECTLY TO THE POSTS WITH ALL OTHER PROVISIONS OF NOTE "5" APPLYING. EXTRA CARE SHOULD BE USED WHEN JOINING OR OVERLAPPING THESE STIFFER FABRICS.
7. FILTER FABRIC FENCES SHALL BE REMOVED WHEN THEY HAVE SERVED THEIR USEFUL PURPOSE BUT NOT BEFORE THE UPSLOPE AREA HAS BEEN STABILIZED. RETAINED SEDIMENT MUST BE REMOVED AND PROPERLY DISPOSED OF OR MULCHED AND SEEDED.
8. INSPECT IMMEDIATELY AFTER EACH RAINFALL, AND AT LEAST DAILY DURING PROLONGED RAINFALL. REPAIR AS NECESSARY.
9. SEDIMENT MUST BE REMOVED WHEN IT REACHES APPROXIMATELY ONE THIRD THE HEIGHT OF THE FENCE, ESPECIALLY IF HEAVY RAINS ARE EXPECTED.
10. ANY SEDIMENT DEPOSITS REMAINING IN PLACE AFTER THE FILTER FENCE IS NO LONGER REQUIRED SHALL BE DRESSED TO CONFORM WITH THE EXISTING GRADE, PREPARED, AND SEEDED.

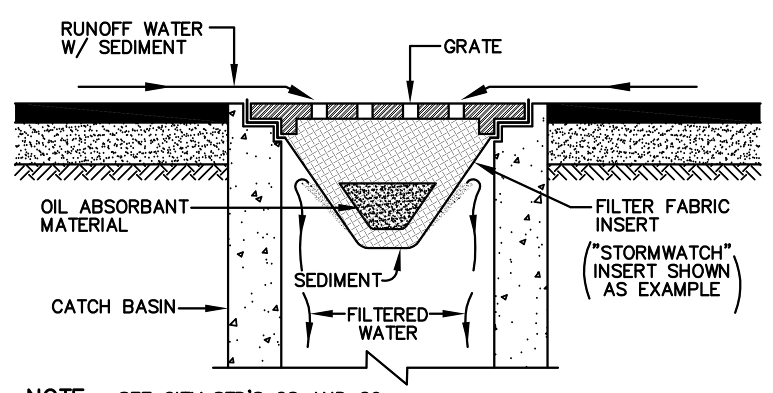

NOTE: SEE CITY STD'S G8 AND G9

"GULLYWASHER", "SILT SACK" OR OTHER APPROVED CATCH BASIN INSERT MAY BE USED FOR INLET PROTECTION. CONTACT: PRICE-MOON ENTERPRISES PH: 360-563-6709 OR, "SILTSACK" BY ACF ENVIRONMENTAL PH: 1-800-644-9223 (OR APPROVED EQUAL).

DETAIL TEMPORARY INLET PROTECTION

NOT TO SCALE

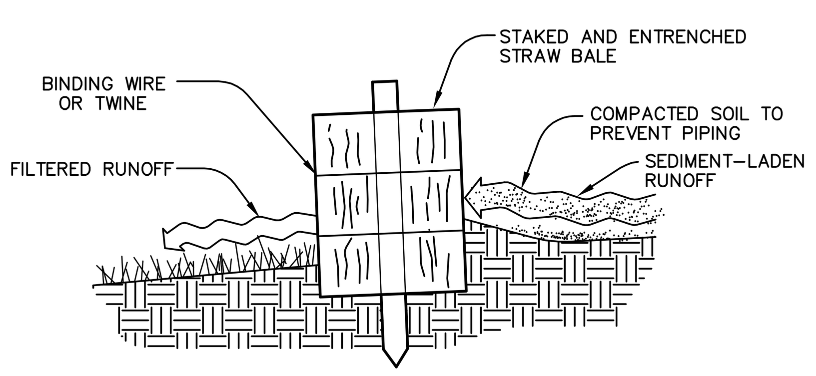

CROSS-SECTION OF PROPERLY INSTALLED STRAW BALE BARRIER

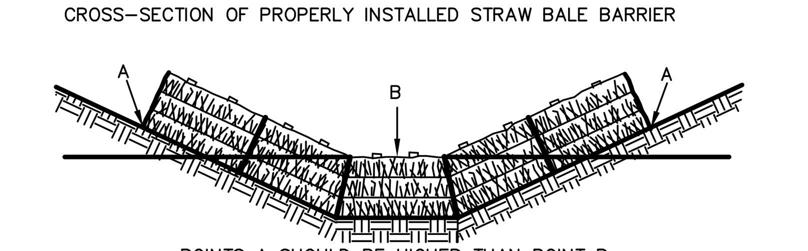

POINTS A SHOULD BE HIGHER THAN POINT B

PROPER PLACEMENT OF STRAW BALE BARRIER IN DRAINAGE WAY. BALES MAY BE WRAPPED IN FILTER FABRIC IF MORE SILT FILTRATION IS NEEDED, ESPECIALLY IN DITCHES.

STRAW BALE BARRIERS

1. STRAW BALE BARRIERS SHALL BE INSPECTED IMMEDIATELY AFTER EACH RUNOFF-PRODUCING RAINFALL AND AT LEAST DAILY DURING PROLONGED RAINFALL.
2. CLOSE ATTENTION SHALL BE PAID TO THE REPAIR OF DAMAGED BALES, END RUNS, AND UNDERCUTTING BENEATH BALES.
3. NECESSARY REPAIRS TO BARRIERS OR REPLACEMENT OF BALES SHALL BE ACCOMPLISHED PROMPTLY.
4. SEDIMENT DEPOSITS SHOULD BE REMOVED AFTER EACH RUNOFF-PRODUCING RAINFALL. THEY MUST BE REMOVED WHEN THE LEVEL OF DEPOSITION REACHES APPROXIMATELY ONE-HALF THE HEIGHT OF THE BARRIER.
5. ANY SEDIMENT DEPOSITS REMAINING IN PLACE AFTER THE STRAW BALE BARRIER IS NO LONGER REQUIRED SHALL BE DRESSED TO CONFORM TO THE EXISTING GRADE, PREPARED AND SEEDED.
6. ALL TEMPORARY AND PERMANENT EROSION AND SEDIMENT CONTROL PRACTICES SHALL BE MAINTAINED AND REPAIRED AS NEEDED TO ASSURE CONTINUED PERFORMANCE OF THEIR INTENDED FUNCTION.

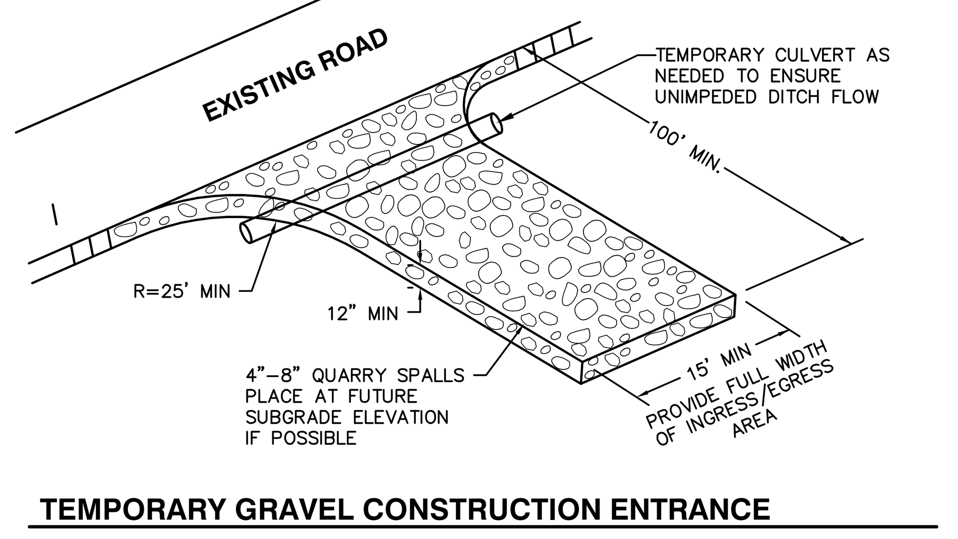

TEMPORARY GRAVEL CONSTRUCTION ENTRANCE

THIS PROVISION IS REQUIRED ONLY IF TRACKING IS ANTICIPATED.

1. INSTALLATION: THE AREA OF THE ENTRANCE SHOULD BE CLEARED OF ALL VEGETATION, ROOTS AND OTHER OBJECTIONABLE MATERIAL. THE GRAVEL SHALL BE PLACED TO THE SPECIFIED DIMENSIONS. ANY DRAINAGE FACILITIES REQUIRED BECAUSE OF WASHING SHOULD BE CONSTRUCTED ACCORDING TO SPECIFICATIONS IN THE PLAN. IF WASH RACKS ARE USED, THEY SHOULD BE INSTALLED ACCORDING TO THE MANUFACTURER'S SPECIFICATIONS.
2. AGGREGATE: 4" TO 8" CRUSHED BALLAST ROCK.
3. ENTRANCE DIMENSIONS: THE AGGREGATE LAYER MUST BE AT LEAST 12 INCHES THICK. IT MUST EXTEND THE FULL WIDTH OF THE VEHICULAR INGRESS AND EGRESS AREA. THE LENGTH OF THE ENTRANCE MUST BE AT LEAST 100 FEET.
4. WASHING: IF CONDITIONS ON THE SITE ARE SUCH THAT MOST OF THE MUD IS NOT REMOVED FROM VEHICLE TIRES BY CONTACT WITH THE GRAVEL, THEN THE TIRES MUST BE WASHED BEFORE VEHICLES ENTER A PUBLIC ROAD. WASH WATER MUST BE CARRIED AWAY FROM THE ENTRANCE TO A SETTLING AREA TO REMOVE SEDIMENT. A WASH RACK MAY ALSO BE USED TO MAKE WASHING MORE CONVENIENT AND EFFECTIVE.
5. MAINTENANCE: THE ENTRANCE SHALL BE MAINTAINED IN A CONDITION WHICH WILL PREVENT TRACKING OR FLOW OF MUD ONTO PUBLIC RIGHT-OF-WAYS. THIS MAY REQUIRE PERIODIC TOP DRESSING WITH 2 INCH STONE AS CONDITIONS DEMAND, AND REPAIR AND/OR CLEAN OUT ANY STRUCTURES USED TO TRAP SEDIMENT. ALL MATERIALS SPILLED, DROPPED, WASHED OR TRACKED FROM VEHICLES ONTO THE ROADWAY OR INTO STORM DRAINS MUST BE REMOVED IMMEDIATELY.

T.E.S.C. GENERAL NOTES

THE TEMPORARY/EROSION/SILTATION CONTROL FACILITIES SPECIFIED ON SHEET 2 WERE SELECTED FOR ANTICIPATED SITE CONDITIONS. ACTUAL SITE CONDITIONS MAY REQUIRE ADDITIONAL MEASURES BEYOND THOSE SPECIFIED. APPROPRIATE RESPONSES TO UNANTICIPATED SITE CONDITIONS MAY INCLUDE, BUT ARE NOT LIMITED TO THE FOLLOWING ADDITIONAL BMPs.

- STRAW MULCH
- JUTE OR SYNTHETIC MATTING, EITHER GENERIC OR PROPRIETARY
- TEMPORARY DITCHES, SWALES, DIKES OR BASINS
- BRUSH OR GRAVEL FILTER BERMS
- ANCHORED PLASTIC SHEETING
- SLOPE SCARIFICATION OR TERRACING
- TIRE WASH STATIONS
- SODDING
- ROCK CHECK DAMS
- DUST CONTROL

SUCH MEASURES SHALL BE SELECTED BY THE CONTRACTOR IN CONSULTATION WITH THE CITY INSPECTOR AND THE PROJECT ENGINEER AND SHALL BE INSTALLED PER CITY OF ARLINGTON STANDARD PLANS, MANUFACTURER'S SPECIFICATIONS, ENGINEER'S DESIGN OR STANDARD CONSTRUCTION INDUSTRY PRACTICE AS THE SITUATION DICTATES.

1. THE TEMPORARY EROSION/SEDIMENTATION CONTROL FACILITIES SHALL BE CONSTRUCTED PRIOR TO ANY GRADING OR LAND CLEARING IN ACCORDANCE WITH THE APPROVED TEMPORARY EROSION/SEDIMENTATION CONTROL PLAN. THESE FACILITIES MUST BE SATISFACTORILY MAINTAINED UNTIL CONSTRUCTION AND LANDSCAPING IS COMPLETED AND THE POTENTIAL FOR ON-SITE EROSION HAS PASSED.
2. NONCOMPLIANCE WITH THE EROSION CONTROL REQUIREMENTS, WATER QUALITY REQUIREMENTS, AND/OR CLEARING LIMITS MAY RESULT IN REVOCATION OF PROJECT PERMITS OR PLAN APPROVAL, FINES AND BOND FORECLOSURES.
3. THE T.E.S.C. FACILITIES SHOWN ON THIS PLAN ARE THE MINIMUM REQUIREMENTS FOR ANTICIPATED SITE CONDITIONS. THE CONTRACTOR SHALL BE RESPONSIBLE FOR PROVIDING IMPROVED OR MODIFIED FACILITIES AS NECESSARY TO MAINTAIN RUNOFF WATER QUALITY DURING AND AFTER SIGNIFICANT STORM EVENTS AND TO ADDRESS THE ACTUAL SITE AND SOIL ENCOUNTERED.
4. THE CONTRACTOR SHALL MAINTAIN ON SITE AT ALL TIMES SUFFICIENT QUANTITIES OF EROSION CONTROL MATERIALS TO COVER ALL EXPOSED SOIL IN THE EVENT OF UNANTICIPATED WEATHER CONDITIONS. THE CONTRACTOR MAY CONSIDER PHASING GRADING ON LARGE SITES TO MINIMIZE BARE SOIL EXPOSURE.
5. THE IMPLEMENTATION OF THESE TESC PLANS AND THE CONSTRUCTION, MAINTENANCE, REPLACEMENT, AND UPGRADING OF THESE T.E.S.C. FACILITIES IS THE RESPONSIBILITY OF THE APPLICANT/CONTRACTOR UNTIL ALL CONSTRUCTION IS APPROVED.
6. ANY AREA STRIPPED OF VEGETATION WITH EXPOSED SOILS, INCLUDING ROADWAY EMBANKMENTS, THAT WILL NOT BE DISTURBED FOR TWO DAYS (OCTOBER 1 TO MARCH 31) OR SEVEN DAYS (APRIL 1 TO SEPTEMBER 30) SHALL BE IMMEDIATELY STABILIZED WITH APPROVED T.E.S.C. METHODS (E.G. SEEDING, MULCHING, NETTING, EROSION BLANKETS, PLASTIC COVERING, ETC.). SOIL STOCKPILES SHALL BE STABILIZED WITHIN 24 HOURS.
7. WHERE STRAW MULCH FOR TEMPORARY EROSION CONTROL IS REQUIRED, IT SHALL BE APPLIED AT A MINIMUM THICKNESS OF TWO INCHES.
8. **WINTER GRADING NOTE:** FROM OCTOBER 1 THROUGH MARCH 31, AND AT ALL OTHER TIMES WHEN LOCAL TEMPERATURE AND WEATHER CONDITIONS PRECLUDE THE RAPID GERMINATION AND ROOTING OF EROSION CONTROL VEGETATION, THE CONTRACTOR SHALL SUBSTITUTE NON-VEGETATIVE EROSION CONTROL METHODS FOR HYDROSEEDING. SUCH METHODS MAY INCLUDE, BUT ARE NOT LIMITED TO: STRAW MULCHES, JUTE OR SYNTHETIC EROSION CONTROL MATTING OR PLASTIC SHEETING. TYPE AND LOCATION OF WINTER EROSION CONTROL MEASURES SHALL BE SELECTED FOR SPECIFIC SITE TOPOGRAPHY AND CONDITIONS IN CONSULTATION WITH THE CITY INSPECTOR AND THE PROJECT ENGINEER. WINTER COVER BMPs SHALL BE INSTALLED WITHIN 2 DAYS OF COMPLETION OF SOIL DISTURBANCE. THE CONTRACTOR SHALL COMPLETE PERMANENT HYDROSEEDING WHEN WEATHER PERMITS.
9. ANY AREA NEEDING T.E.S.C. MEASURES, NOT REQUIRING IMMEDIATE ATTENTION, SHALL BE ADDRESSED WITHIN FIFTEEN (15) DAYS.
10. THE T.E.S.C. FACILITIES ON INACTIVE SITES SHALL BE INSPECTED AND MAINTAINED A MINIMUM OF ONCE A MONTH OR WITHIN THE 48 HOURS FOLLOWING A STORM EVENT
11. ALL TEMPORARY EROSION AND SEDIMENT CONTROL MEASURES SHALL BE REMOVED WITHIN 30 DAYS AFTER FINAL SITE STABILIZATION IS ACHIEVED OR AFTER THE TEMPORARY BMPs ARE NO LONGER NEEDED. TRAPPED SEDIMENT SHALL BE REMOVED OR STABILIZED ON SITE. DISTURBED SOIL AREAS RESULTING FROM REMOVAL SHALL BE PERMANENTLY STABILIZED.
12. THE CONTRACTOR SHALL USE INDUSTRY BEST MANAGEMENT PRACTICES TO PREVENT PETROLEUM PRODUCTS, FERTILIZERS, CONCRETE BYPRODUCTS AND OTHER POLLUTANTS FROM ENTERING OFF-SITE DRAINAGE COURSES. SLASH PILES AND OTHER SOLID WASTE SHALL BE DISPOSED OF IN ACCORDANCE WITH ALL APPLICABLE LOCAL REGULATIONS.
13. THE CONTRACTOR SHALL KEEP OFF-SITE STREETS CLEAN AT ALL TIMES BY THE USE OF A ROCK CONSTRUCTION ENTRANCE INSTALLED PER CITY STD. PLAN G12, SUPPLEMENTED BY A WHEEL WASH FACILITY IF NECESSARY. DEBRIS TRACTED ONTO PUBLIC ROADS SHALL BE REMOVED BY SWEEPING OR WASHING WITH CITY APPROVAL.

SEEDING NOTES

1. ALL DISTURBED AREAS SHALL BE SEEDED WITH A PERENNIAL GROUND COVER GRASS TO MINIMIZE EROSION. GRASS SEEDING WILL BE DONE USING AN APPROVED HYDROSEEDER OR AS OTHERWISE APPROVED BY THE CITY OF ARLINGTON.
2. EFFECTIVE SEEDING IS BEST ACCOMPLISHED DURING THE MONTHSOF APRIL, MAY, JUNE AND SEPTEMBER. SEEDING DURING JULY AND AUGUST MAY REQUIRE SUBSTANTIAL IRRIGATION. SEE WINTER GRADING NOTE ABOVE.
3. IMMEDIATELY FOLLOWING FINISH GRADING, PERMANENT SEEDING WILL BE APPLIED (4# PER 1,000 SQ. FT.) EXCEPT AS NOTED IN THE PLANS, THIS SHALL INCLUDE THE FOLLOWING MIX OF SEEDS:
4. 40% PERENNIAL RYE GRASS, 40% RED FESCUE, 10% WHITE DUTCH CLOVER, 10% COLONIAL BENTGRASS. SEED MIXTURE SHALL BE MIN. 98% PURE, WITH MIN. GERMINATION RATE OF 90%, AND SHALL BE APPLIED IN ACCORDANCE WITH SECTION 6-9 OF THE ARLINGTON CONSTRUCTION STANDARDS.
5. ALL AREAS TO BE SEEDED SHALL BE CULTIVATED TO THE SATISFACTION OF THE CITY INSPECTOR. THIS MAY BE ACCOMPLISHED BY DISKING, RAKING HARROWING OR OTHER ACCEPTABLE MEANS. PERFORM ALL CULTURAL OPERATIONS ACROSS OR AT RIGHT ANGLES TO THE SLOPE. IF NECESSARY, SURFACE RUNOFF CONTROL MEASURES SUCH AS GRADIENT TERRACES, INTERCEPTOR DIKE/SWALES, LEVEL SPREADERS, AND SEDIMENT BASINS SHALL BE INSTALLED PRIOR TO SEEDING.
6. FERTILIZER SHALL BE STANDARD COMMERCIAL GRADE AS SPECIFIED IN SECTION 6-9 OF THE ARLINGTON CONSTRUCTION STANDARDS. RATE AND METHOD OF APPLICATION SHALL BE PER MANUFACTURER'S SPECIFICATIONS.
7. CONTRACTOR SHALL MONITOR GERMINATION AND GROWTH UNTIL GROUND COVER IS UNIFORMLY ESTABLISHED. THIN AREAS SHALL BE RESEEDED OF OVERSEEDED AS NECESSARY.

CONTRACTOR RESPONSIBILITY FOR EROSION/SILTATION CONTROL:

IT IS THE INTENT OF THE TEMPORARY EROSION AND SILTATION CONTROL PLAN THAT STORM WATER RUNOFF BE CONTROLLED AT ALL TIMES TO PREVENT SOIL EROSION AND TO MAINTAIN WATER QUALITY. ANY AND ALL MEASURES NECESSARY TO DO SO SHALL BE EMPLOYED BY THE CONTRACTOR.

1. ***REGARDLESS OF SITE, WEATHER, SOIL OR OTHER CONDITIONS, THE CONTRACTOR SHALL BE FULLY RESPONSIBLE FOR ENSURING THAT EROSION DOES NOT OCCUR ON THE SITE AND THAT POLLUTED OR SILT-LADEN RUNOFF DOES NOT LEAVE THE SITE OR ENTER INTO ANY CREEK, STREAM, WETLAND OR WATER BODY ON THE SITE.***
2. BEYOND THE MINIMUM REQUIREMENTS SHOWN ON THIS PLAN, THE CONTRACTOR SHALL BE RESPONSIBLE FOR SELECTING AND IMPLEMENTING APPROPRIATE METHODS, "BEST MANAGEMENT PRACTICES" (BMPs), FOR STORM WATER TREATMENT AND CONTROL THAT MEET THE REQUIREMENTS OF BOTH THE WASHINGTON STATE DEPARTMENT OF ECOLOGY AND THE CITY OF ARLINGTON.
3. THE CONTRACTOR SHALL REPORT ALL WATER QUALITY CONCERNS AND ACTIVITIES TO THE PROJECT ENGINEER AND TO THE CITY OF ARLINGTON. IN THE EVENT THAT THE INSTALLED WATER QUALITY CONTROL MEASURES ARE INEFFECTIVE AT CONTROLLING EROSION AND SIILTATION, THE CONTRACTOR SHALL IMMEDIATELY REPORT TO AND CONSULT WITH THE PROJECT ENGINEER TO FIND AN APPROPRIATE REMEDY. ALL CONSTRUCTION ACTIVITIES, WITH THE EXCEPTION OF EROSION AND SILTATION CONTROL MEASURES, SHALL CEASE UNTIL SUCH TIME AS THE WATER QUALITY IS BROUGHT UNDER CONTROL.
4. THE CONTRACTOR SHALL BE RESPONSIBLE FOR MONITORING WEATHER FORECASTS AND ANTICIPATING STORM ACTIVITY AND SHALL SCHEDULE ALL PROJECT ACTIVITIES IN ANTICIPATION OF THE WEATHER.
5. ALL SUPPLIES AND MATERIALS NECESSARY FOR IMPLEMENTING BMPs SHALL BE STORED ON SITE AND SHALL BE IMMEDIATELY AVAILABLE FOR USE. SUCH SUPPLIES AND MATERIALS SHALL INCLUDE, BUT NOT BE LIMITED TO: STRAW BALES OR OTHER MULCHING MATERIAL, SILT FENCING AND STAKES, FILTER FABRIC, ETC.
6. DURING AND AFTER RUNOFF PRODUCING STORM EVENTS, THE CONTRACTOR SHALL MONITOR ALL EROSION CONTROL MEASURES AND SHALL PRIORITIZE IMPLEMENTATION AND MAINTENANCE OF EROSION AND SILTATION CONTROL MEASURES ABOVE ALL OTHERS.

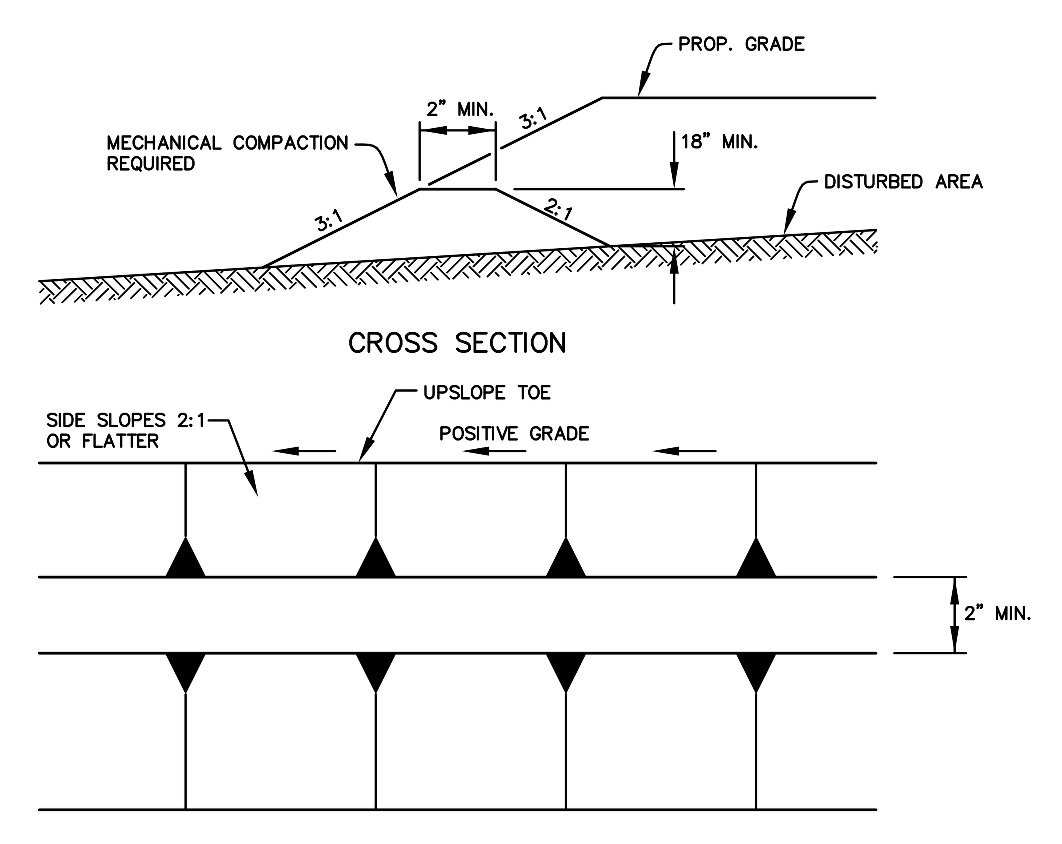

DETAIL TEMPORARY PERIMETER DIKE

NOT TO SCALE

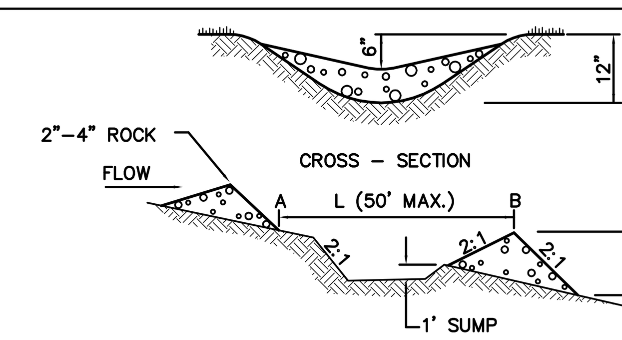

L = THE DISTANCE SUCH THAT POINTS A AND B ARE EQUAL ELEVATION

ROCK CHECK DAM

NOT TO SCALE

CITY OF ARLINGTON FILE NO. C-04-056-LP

AS-BUILT DRAWINGS

HIGA·BURKHOLDER ASSOCIATES, LLC
LAND USE PLANNING / CIVIL ENGINEERING
1721 Hewitt Avenue ■ Suite 401
Everett, Washington 98201
(425) 252-2826 Telephone
(425) 252-9551 Fax
150 North Seventh Street
Springfield, Oregon 97477
Telephone (541) 988-1862
Fax (541) 988-1863

JAMES A. KRESGE · STATE OF WASHINGTON · 15791 REGISTERED · PROFESSIONAL ENGINEER
EXPIRES 3/17/2008

CITY OF ARLINGTON
THIS SHEET HAS BEEN APPROVED PER CONDITIONS ON THE COVER SHEET

CONSTRUCTION	AS-BUILT ACKNOWLEDGEMENT
BY: ______ CITY ENGINEER	BY: ______ CITY ENGINEER
DATE: ____/____/____	DATE: ____/____/____

CALL 48 HOURS BEFORE YOU DIG 1-800-424-5555

DATE	REVISIONS	BY
07/05/05	REVISED PER CITY REVIEW	BOM
08/24/05	REVISED PER CITY REVIEW	BOM
02/15/06	REVISED PER CITY REVIEW	JAK
04/21/06	REVISED PER CITY REVIEW	JAK
11/30/06	REVISED PER AS-BUILT	JAK
12/28/06	REVISED PER AS-BUILT	JAK
1/25/07	EDITS PER A-B COMMENTS	JAK

PLAN DATE: 12/16/04
DESIGNED BY: MPG
DRAWN BY: RLM
PLAN CHECK BY: JAK

1ST SUBMITTAL: 01/05/05
2ND SUBMITTAL: 07/06/05
3RD SUBMITTAL: 02/15/06
4TH SUBMITTAL 04/21/06

CONSTRUCTION PLANS

EAGLECREST VIEW

GRADING AND T.E.S.C. NOTES AND DETAILS

JOB NO. **1771C**

XREF: NONE

SOUTHWEST 1/4 OF SECTION 23, TOWNSHIP 31 NORTH, RANGE 5 EAST, W.M.

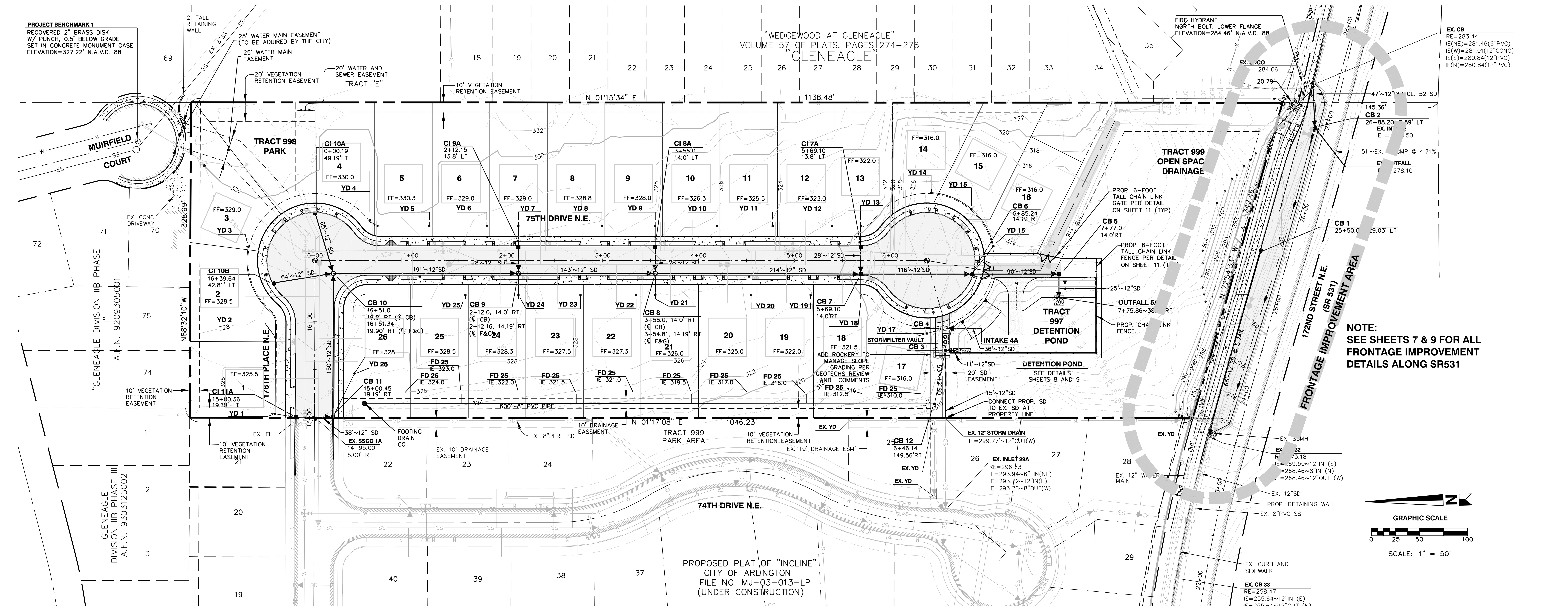

ROAD AND STORM DRAINAGE PLAN

SCALE: 1" = 50'

DRIVEWAY NOTE
ONE 20' WIDE CEMENT DRIVEWAY PER STD. PLAN R-7 SHALL BE INSTALLED ON EACH LOT. DRIVEWAY SHALL BE CENTERED 15 FEET FROM THE LOT LINE AS SHOWN OR AS OTHERWISE DIRECTED AND APPROVED BY THE CITY ENGINEER.

YARD DRAIN STRUCTURE AND PIPES

STRUCTURE NUMBER	LOCATION (1)	RIM/GRATE ELEVATION	AS-BUILT	INVERT ELEVATION	AS-BUILT	INVERT ELEVATION	AS-BUILT	INVERT ELEVATION	AS-BUILT	FROM	TO	SLOPE	AS-BUILT	TYPE	REMARKS
YD 1	176TH PL NE: 15+03.79~41.00' LT	325.3	325.4	323.4~6" IN (E)	322.3	323.0~8" IN (W)	322.3~8" IN (N)	323.0~8" IN (SW)	322.2~8" IN (S)	YD 1	CI 11A	20' @ 6.25%	22' @ 1.91%	PVC PIPE	12" YARD DRAIN PER ARLINGTON STD. SD-14
YD 2	176TH PL NE: 15+83.79~41.00' LT	326.9	327.0	325.3~6" IN (E)	324.0~6" IN(NE)	324.3~8" IN (W)	324.1~8" IN (N)	324.7~8" IN (SW)	323.9~8" IN (W)	YD 2	YD 1	80' @ 2.08%	79' @ 2.08%	PVC PIPE	12" YARD DRAIN PER ARLINGTON STD. SD-14
YD 3	176TH PL NE: 16+78.03~69.57 LT	328.9	331.0	327.2~6" IN (N)	326.8	------------	----------	326.8~8" IN (W)	326.7~8" IN (SW)	YD 3	YD 2	103' @ 2.19%	102' @ 2.63%	PVC PIPE	12" YARD DRAIN PER ARLINGTON STD. SD-14
YD 4	75TH PLACE NE: 0+57.22~42.05' LT	329.5	330.7	327.5~6" IN (E)	327.9	------------	----------	327.1~8" IN (S)	327.7	YD 4	YD 5	64' @ 0.80%	64' @ 1.23%	PVC PIPE	12" YARD DRAIN PER ARLINGTON STD. SD-14
YD 5	75TH PLACE NE: 1+19.22~36.00' LT	329.3	329.8	327.0~6" IN (E)	326.9	326.7~8" IN (N)	326.9	326.7~8" IN (S)	326.7	YD 5	YD 6	60' @ 0.88%	61' @ 1.34%	PVC PIPE	12" YARD DRAIN PER ARLINGTON STD. SD-14
YD 6	75TH PLACE NE:1+79.22~36.00' LT	328.7	329.0	326.8~6" IN (E)	326.0	325.2~8" IN (N)	325.9	325.2~8" IN (S)	325.4	YD 6	YD 7	33' @ 0.83%	32' @ 1.56%	PVC PIPE	12" YARD DRAIN PER ARLINGTON STD. SD-14
YD 7	75TH PLACE NE: 2+12.15~36.00' LT	328.5	328.2	326.4~6" IN (E)	325.2	326.1~8" IN (N)	325.3	326.0~8" IN (W)	325.2	YD 7	CI 9A	22' @ 3.18%	22' @ 6.45%	PVC PIPE	12" YARD DRAIN PER ARLINGTON STD. SD-14
YD 8	75TH PLACE NE: 2+99.22~36.00' LT	327.7	328.0	325.5~6" IN (E)	325.1	------------	----------	325.1~8" IN (S)	325.0	YD 8	YD 9	56' @ 1.43%	56' @ 1.68%	PVC PIPE	12" YARD DRAIN PER ARLINGTON STD. SD-14
YD 9	75TH PLACE NE: 3+54.81~36.00' LT	327.0	327.0	324.0~6" IN (E)	324.1	324.7~8" IN (N)	324.1	324.6~8" IN (W)	324.1	YD 9	CI 8A	26' @ 9.65%	22' @ 9.27%	PVC PIPE	12" YARD DRAIN PER ARLINGTON STD. SD-14
YD 10	75TH PLACE NE: 4+19.22~36.00' LT	325.3	325.6	323.3~6" IN (E)	322.6	------------	----------	322.9~8" IN (S)	322.5	YD 10	YD 11	58' @ 2.83%	58' @ 2.14%	PVC PIPE	12" YARD DRAIN PER ARLINGTON STD. SD-14
YD 11	75TH PLACE NE: 4+77.22~36.00' LT	323.6	324.3	321.6~6" IN (E)	321.8	321.3~8" IN (N)	321.2	321.3~8" IN (S)	321.2	YD 11	YD 12	62' @ 3.03%	62' @ 3.11%	PVC PIPE	12" YARD DRAIN PER ARLINGTON STD. SD-14
YD 12	75TH PLACE NE: 5+39.22~36.00' LT	321.6	322.1	319.4~6" IN (E)	319.3	319.1~8" IN (N)	319.2	319.1~8" IN (S)	319.1	YD 12	YD 13	30' @ 4.23%	29' @ 4.86%	PVC PIPE	12" YARD DRAIN PER ARLINGTON STD. SD-14
YD 13	75TH PLACE NE: 5+69.10~36.00 LT	320.6	320.8	318.4~6" IN (E)	317.7	318.4~8" IN (N)	317.7	318.4~8" IN (W)	317.6	YD 13	CI 7A	20' @ 10.5%	22' @ 9.23%	PVC PIPE	12" YARD DRAIN PER ARLINGTON STD. SD-14
YD 14	75TH PLACE NE: 6+42.59~70.86' LT	315.5	317.6	313.6~6" IN (E)	314.7	------------	----------	313.6~8" IN (S)	314.6~8" IN (SW)	YD 14	YD 15	46' @ 3.28%	46' @ 2.72%	PVC PIPE	12" YARD DRAIN PER ARLINGTON STD. SD-14
YD 15	75TH PLACE NE: 6+84.60~53.69' LT	314.3	316.2	312.5~6" IN (SE)	313.4	312.2~8" IN (NE)	313.3	312.2~8" IN (SW)	313.3	YD 15	YD 16	46' @ 1.17%	45' @ 3.98%	PVC PIPE	12" YARD DRAIN PER ARLINGTON STD. SD-14
YD 16	75TH PLACE NE: 7+07.54~15.00' LT	313.5	314.4	311.9~6" IN (S)	311.5	311.9~8" IN (E)	311.9~8" IN (NE)	311.9~8" IN (W)	311.4~8" IN (NW)	YD 16	CB 6	37' @ 7.30%	36' @ 6.61%	PVC PIPE	12" YARD DRAIN PER ARLINGTON STD. SD-14
YD 17	75TH PLACE NE: 6+38.16~76.18 RT	314.8	315.3	313.6~6" IN (NW)	312.4	------------	----------	313.2~8" IN (SE)	312.3	YD 17	CB 4	18' @ 1.00%	20' @ 7.50%	PVC PIPE	12" YARD DRAIN PER ARLINGTON STD. SD-14
YD 18	75TH PLACE NE: 5+16.83~36.00' RT	320.0	320.0	319.3~6" IN (W)	316.9	319.3~8" IN (N)	317.0	319.3~8" IN (E)	316.9	YD 18	CB 7	20' @ 12.5%	22' @ 6.50%	PVC PIPE	12" YARD DRAIN PER ARLINGTON STD. SD-14
YD 19	75TH PLACE NE: 5+16.83~36.00' RT	322.1	321.9	320.3~6" IN (W)	319.0	320.3~8" IN (N)	319.0	320.3~8" IN (S)	318.9	YD 19	YD 18	53' @ 3.77%	53' @ 3.60%	PVC PIPE	12" YARD DRAIN PER ARLINGTON STD. SD-14
YD 20	75TH PLACE NE: 4+54.83~36.00' RT	323.8	324.2	322.3~6" IN (W)	321.3	------------	----------	322.3~8" IN (S)	321.2	YD 20	YD 19	62' @ 3.16%	61' @ 3.59%	PVC PIPE	12" YARD DRAIN PER ARLINGTON STD. SD-14
YD 21	75TH PLACE NE: 3+54.97~36.00' RT	326.5	326.8	323.8~6" IN (W)	323.9	323.8~8" IN (N)	324.0	323.8~8" IN (E)	323.8	YD 21	CB 8	19' @ 6.32%	22' @ 8.32%	PVC PIPE	12" YARD DRAIN PER ARLINGTON STD. SD-14
YD 22	75TH PLACE NE: 3+34.83~36.00' RT	327.0	327.1	325.1~6" IN (W)	324.2	324.7~8" IN (N)	324.2	324.7~8" IN (S)	324.1	YD 22	YD 21	20' @ 3.00%	21' @ 0.76%	PVC PIPE	12" YARD DRAIN PER ARLINGTON STD. SD-14
YD 23	75TH PLACE NE: 2+76.83~36.00' RT	327.6	328.1	325.3~6" IN (W)	325.0	------------	----------	325.3~8" IN (S)	324.9	YD 23	YD 22	58' @ 1.00%	58' @ 1.09%	PVC PIPE	12" YARD DRAIN PER ARLINGTON STD. SD-14
YD 24	75TH PLACE NE: 2+12.16~36.00' RT	328.1	328.2	326.1~6" IN (W)	325.3	325.7~8" IN (N)	325.4	324.7~8" IN (E)	325.2	YD 24	CB 9	20' @ 5.15%	22' @ 8.96%	PVC PIPE	12" YARD DRAIN PER ARLINGTON STD. SD-14
YD 25	75TH PLACE NE: 1+56.83~36.00' RT	328.6	329.2	326.3~6" IN (W)	326.4	------------	----------	326.3~8" IN (S)	326.1	YD 25	YD 24	55' @ 1.00%	55' @ 1.42%	PVC PIPE	12" YARD DRAIN PER ARLINGTON STD. SD-14
YD 26	75TH PLACE NE: 0+94.83~36.00' RT	329.0	325.8	326.0~6" IN (W)	322.9~6" IN(SE)	------------	----------	326.0~8" IN (S)	322.8~8" IN (NW)	YD 26	CB 11	65' @ 5.10%	45' @ 2.67%	PVC PIPE	12" YARD DRAIN PER ARLINGTON STD. SD-14

LEGEND

	EX. TRAFFIC SIGN	OHP	EXISTING OVERHEAD POWER
WM	EX. WATER METER	W	EXISTING WATER
MB	EX. MAILBOX		PROPERTY BOUNDARY
FH	EX. FIRE HYDRANT		EXISTING ASPHALT PAVEMENT
TR	EX. TELEPHONE RISER		PROPOSED ASPHALT PAVEMENT
PP	EX. POWER POLE		
T	EXISTING TELEPHONE CONDUIT		PROPOSED CONCRETE
℄ F&G	CENTER LINE FRAME & GRATE		
℄ CB	CENTERLINE CATCH BASIN		PROPOSED GRAVEL

DATUM N.A.V.D. 1988 (BASED ON A G.P.S. TIE TO SNOHOMISH COUNTY CONTROL #1168)

BENCHMARK
BM 1 VERTICAL BENCHMARK = CASED 2" BRASS CAP MONUMENT AT THE CENTER OF MUIRFIELD COURT CUL-DE-SAC.
N.A.V.D. ELEVATION = 327.22'
(FOR CONVERSION TO N.G.V.D. 1929, SUBTRACT 3.73')
BM 2 FIRE HYDRANT
NORTH BOLT, LOWER FLANGE
ELEVATION=284.46' N.A.V.D. 88

AS-BUILT DRAWINGS

CITY OF ARLINGTON FILE NO. C-04-056-LP

HIGA-BURKHOLDER ASSOCIATES, LLC
LAND USE PLANNING / CIVIL ENGINEERING
1721 Hewitt Avenue ■ Suite 401
Everett, Washington 98201
(425) 252-2826 Telephone
(425) 252-9551 Fax
150 North Seventh Street
Springfield, Oregon 97477
Telephone (541) 988-1862
Fax (541) 988-1863

JAMES A. KRESGE — STATE OF WASHINGTON — 15791 REGISTERED PROFESSIONAL ENGINEER
EXPIRES 3/17/2008

CITY OF ARLINGTON
THIS SHEET HAS BEEN APPROVED PER CONDITIONS ON THE COVER SHEET

CONSTRUCTION	AS-BUILT ACKNOWLEDGEMENT
BY: ______ CITY ENGINEER	BY: ______ CITY ENGINEER
DATE: ____/____/____	DATE: ____/____/____

CALL 48 HOURS BEFORE YOU DIG 1-800-424-5555

DATE	REVISIONS	BY
07/05/05	REVISED PER CITY REVIEW	BOM
08/24/05	REVISED PER CITY REVIEW	BOM
02/15/06	REVISED PER CITY REVIEW	JAK
04/21/06	REVISED PER CITY REVIEW	JAK
11/30/06	REVISED PER AS-BUILT	JAK
12/28/06	REVISED PER AS-BUILT	JAK
1/25/07	EDITS PER A-B COMMENTS	JAK

PLAN DATE: 12/16/04
DESIGNED BY: MPG
DRAWN BY: RLM
PLAN CHECK BY: JAK

1ST SUBMITTAL: 01/05/05
2ND SUBMITTAL: 07/06/05
3RD SUBMITTAL: 02/15/06
4TH SUBMITTAL: 04/21/06

CONSTRUCTION PLANS
EAGLECREST VIEW
ROAD AND STORM DRAINAGE PLAN

JOB NO. 1771C

XREF: MORISC.DWG

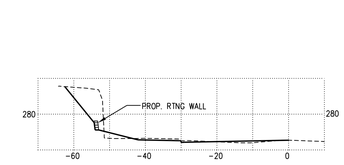

STA 23+50

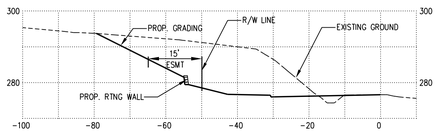

STA 24+00

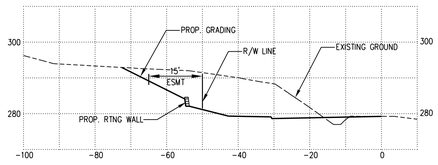

STA 24+50

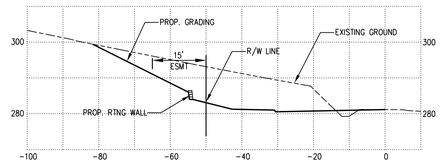

STA 25+00

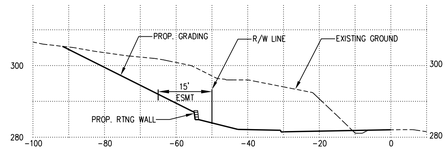

STA 25+50

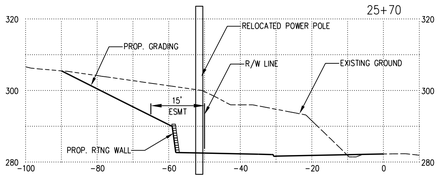

STA 25+70

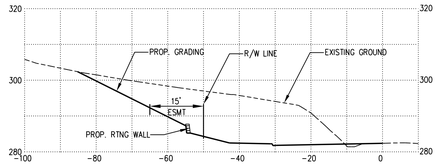

STA 26+00

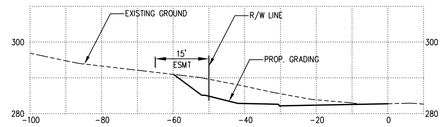

STA 26+50

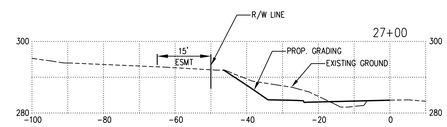

STA 27+00

CENTERLINE PROFILE @ SELECTED STATIONS ALONG 172ND STREET N.E. (SR531)

SCALE: 1" =20' VERTICAL
1" =20' HORIZONTAL

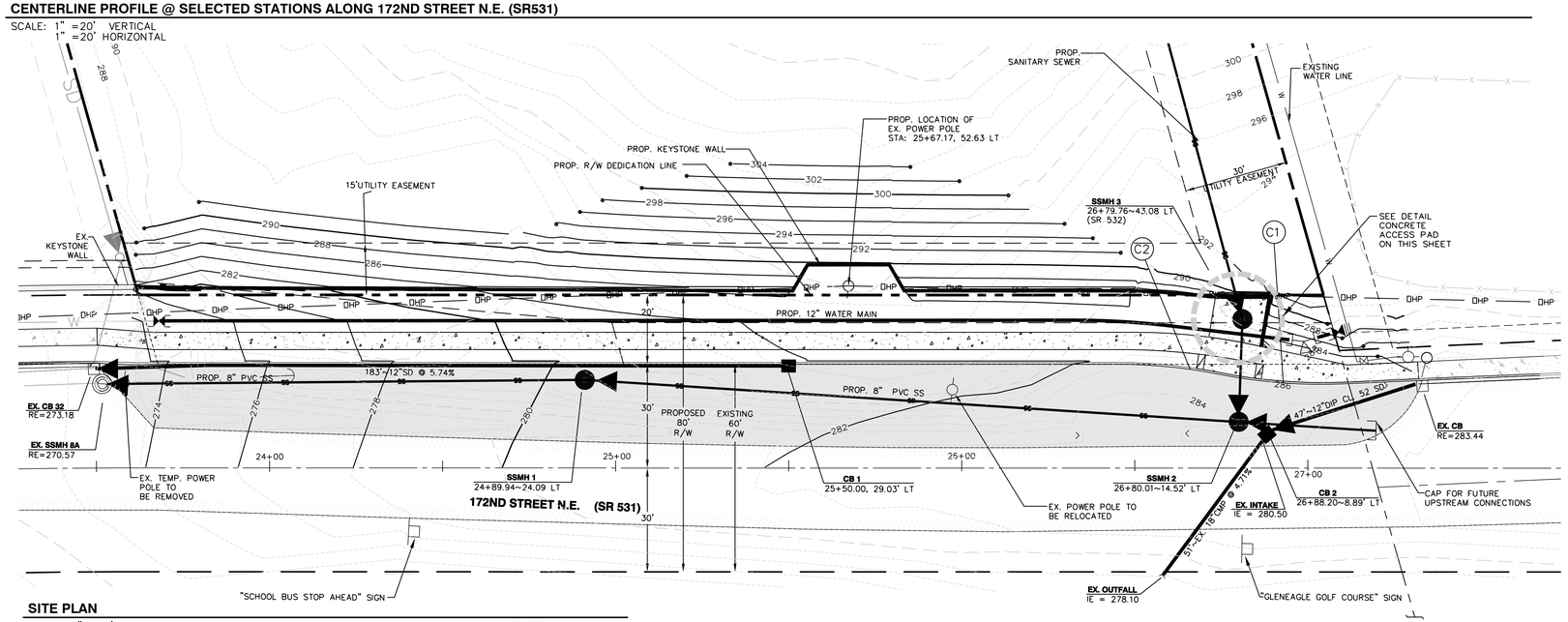

SITE PLAN

SCALE: 1" =20'

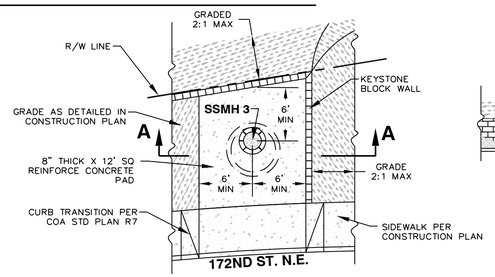

CONCRETE PAD AT SSMH 3 ON 172ND ST. N.E.

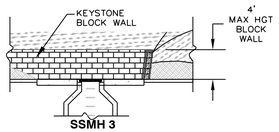

SECTION A-A

AS-BUILT DRAWINGS NOT TO SCALE

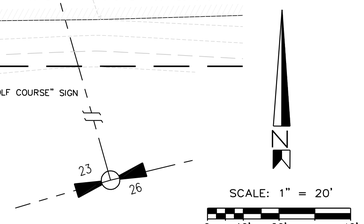

SCALE: 1" = 20'
0 10' 20' 40'

CURVE DATA – CURB TRANSITION – SR 531						
NO.	RADIUS	DELTA	LENGTH	TANGENT	CHORD	CHORD BRG.
C-1	150.00'	13°53'17"	36.35'	18.27'	36.3'	N68°35'17"W
C-2	150.00'	11°16'39"	29.53'	14.81'	29.5'	N67°16'57"W

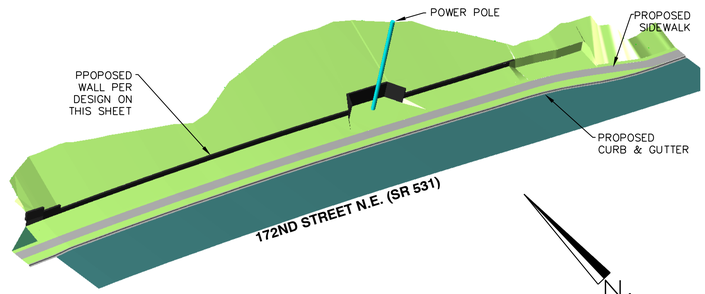

3D RENDERED PLAN FRONTAGE IMPROVEMENT

SCALE: N.T.S.

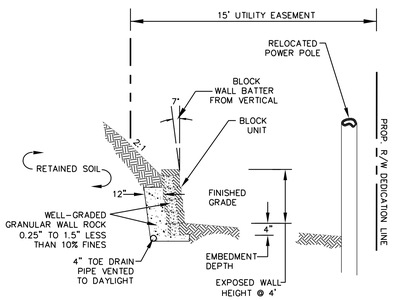

WALL SECTION @ POWER POLE ALONG 172ND ST. NE STA 25+80.0

N.T.S.

DATUM N.A.V.D. 1988 (BASED ON A G.P.S. TIE TO SNOHOMISH COUNTY CONTROL #1168)

BENCHMARK

BM 1 VERTICAL BENCHMARK = CASED 2" BRASS CAP MONUMENT AT THE CENTER OF MUIRFIELD COURT CUL-DE-SAC.
N.A.V.D. ELEVATION = 327.22'
(FOR CONVERSION TO N.G.V.D. 1929, SUBTRACT 3.73')

BM 2 FIRE HYDRANT
NORTH BOLT, LOWER FLANGE
ELEVATION=284.46' N.A.V.D. 88

CITY OF ARLINGTON FILE NO. C-04-056-LP

HIGA-BURKHOLDER ASSOCIATES, LLC
LAND USE PLANNING / CIVIL ENGINEERING
1721 Hewitt Avenue ■ Suite 401
Everett, Washington 98201
(425) 252-2826 Telephone
(425) 252-9551 Fax
150 North Seventh Street
Springfield, Oregon 97477
Telephone (541) 988-1862
Fax (541) 988-1863

JAMES A. KREGER — STATE OF WASHINGTON — 15781 — REGISTERED PROFESSIONAL ENGINEER
EXPIRES 3/17/2008

THIS SHEET HAS BEEN APPROVED PER CONDITIONS ON THE COVER SHEET

CONSTRUCTION	AS-BUILT ACKNOWLEDGEMENT
BY: _____ CITY ENGINEER	BY: _____ CITY ENGINEER
DATE: ____/____/____	DATE: ____/____/____

CALL 48 HOURS BEFORE YOU DIG 1-800-424-5555

DATE	REVISIONS	BY
07/05/05	REVISED PER CITY REVIEW	BOM
08/24/05	REVISED PER CITY REVIEW	BOM
02/15/06	REVISED PER CITY REVIEW	JAK
04/21/06	REVISED PER CITY REVIEW	JAK
11/30/06	REVISED PER AS-BUILT	JAK
12/28/06	REVISED PER AS-BUILT	JAK
1/25/07	EDITS PER A-B COMMENTS	JAK

PLAN DATE: 12/16/04
DESIGNED BY: MPG
DRAWN BY: RLM
PLAN CHECK BY: JAK

1ST SUBMITTAL:	01/05/05
2ND SUBMITTAL:	07/06/05
3RD SUBMITTAL:	02/15/06
4TH SUBMITTAL	04/21/06

CONSTRUCTION PLANS
EAGLECREST VIEW
FRONTAGE IMPROVEMENT
SR 531 (172ND STREET N.E.)

JOB NO. 1771C

7/16

XREF: MORSSC.DWG

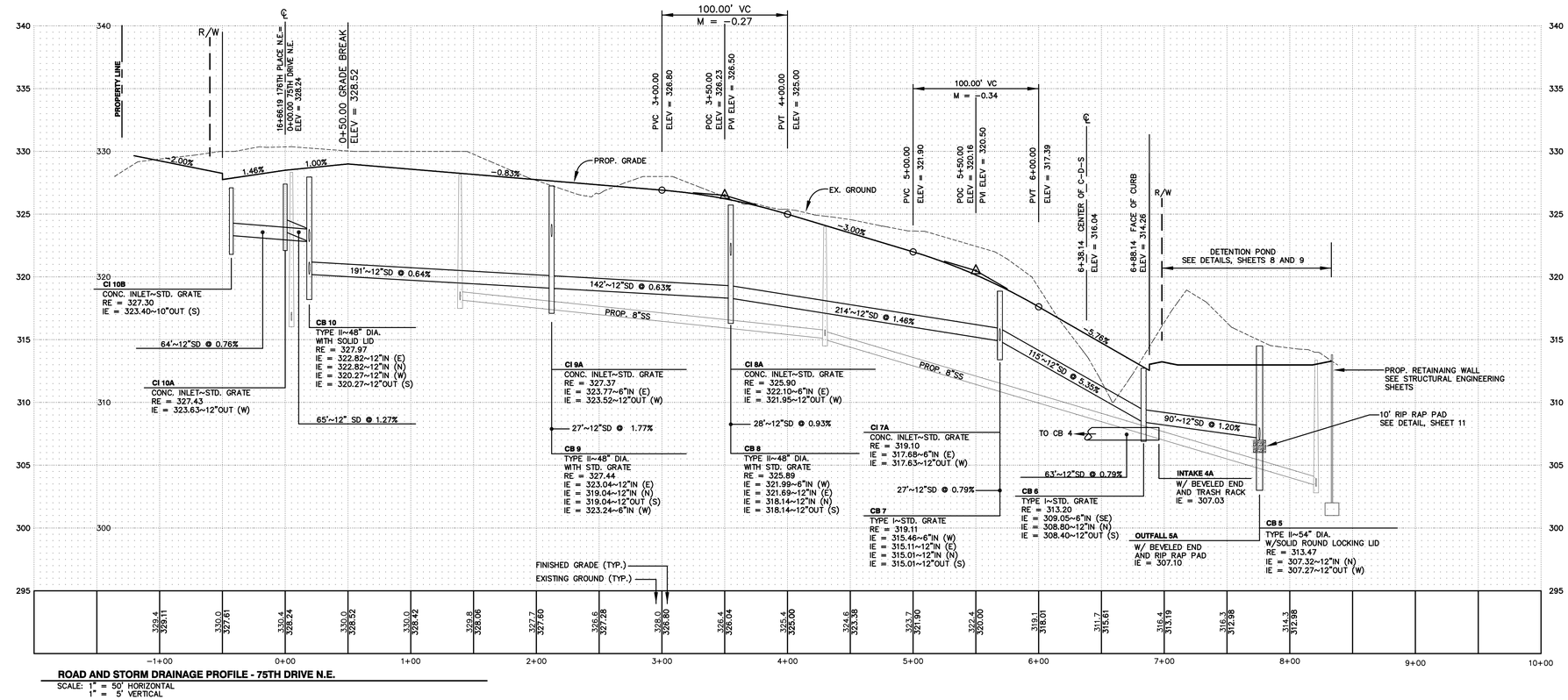

ROAD AND STORM DRAINAGE PROFILE - 75TH DRIVE N.E.
SCALE: 1" = 50' HORIZONTAL
1" = 5' VERTICAL

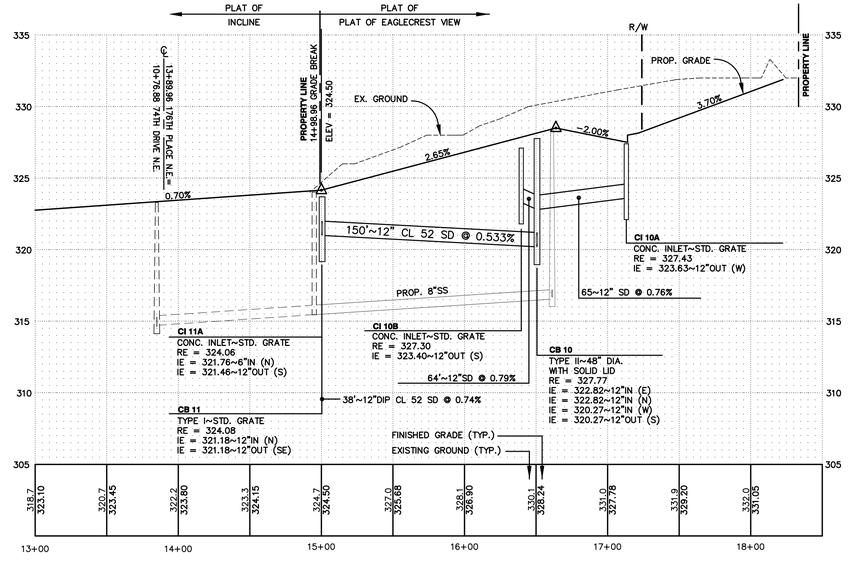

ROAD AND STORM DRAINAGE PROFILE - 176TH PLACE N.E.
SCALE: 1" = 50' HORIZONTAL
1" = 5' VERTICAL

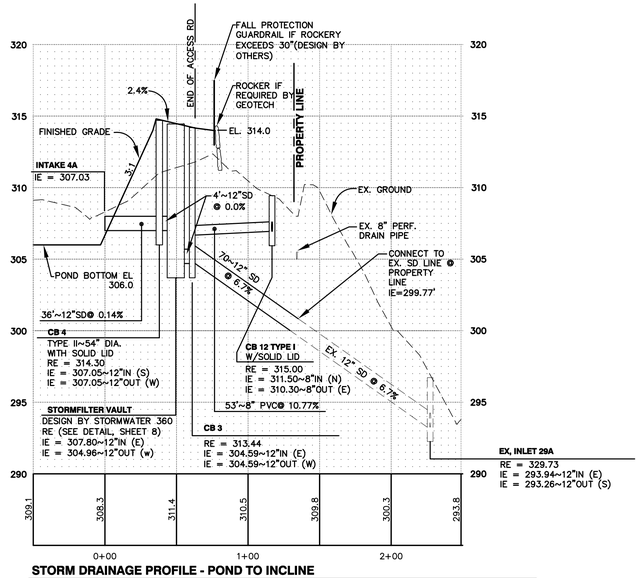

STORM DRAINAGE PROFILE - POND TO INCLINE
SCALE: 1" = 50' HORIZONTAL
1" = 5' VERTICAL

DATUM N.A.V.D. 1988 (BASED ON A G.P.S. TIE TO SNOHOMISH COUNTY CONTROL #1168)

BENCHMARK
BM 1 VERTICAL BENCHMARK = CASED 2" BRASS CAP MONUMENT AT THE CENTER OF MUIRFIELD COURT CUL-DE-SAC.
N.A.V.D. ELEVATION = 327.22'
(FOR CONVERSION TO N.G.V.D. 1929, SUBTRACT 3.73')

BM 2 FIRE HYDRANT
NORTH BOLT, LOWER FLANGE
ELEVATION=284.46' N.A.V.D. 88

AS-BUILT DRAWINGS

CITY OF ARLINGTON FILE NO. C-04-056-LP

HIGA-BURKHOLDER ASSOCIATES, LLC
LAND USE PLANNING / CIVIL ENGINEERING
1721 Hewitt Avenue ■ Suite 401
Everett, Washington 98201
(425) 252-2826 Telephone
(425) 252-9551 Fax
150 North Seventh Street
Springfield, Oregon 97477
Telephone (541) 988-1862
Fax (541) 988-1863

JAMES A. KREGGE — STATE OF WASHINGTON — 15791 — REGISTERED PROFESSIONAL ENGINEER
EXPIRES 3/17/2008

CITY OF ARLINGTON
THIS SHEET HAS BEEN APPROVED PER CONDITIONS ON THE COVER SHEET

CONSTRUCTION	AS-BUILT ACKNOWLEDGEMENT
BY: _____ CITY ENGINEER	BY: _____ CITY ENGINEER
DATE: ____ /____ /____	DATE: ____ /____ /____

CALL 48 HOURS BEFORE YOU DIG 1-800-424-5555

DATE	REVISIONS	BY
07/05/05	REVISED PER CITY REVIEW	BOM
08/24/05	REVISED PER CITY REVIEW	BOM
02/15/06	REVISED PER CITY REVIEW	JAK
04/21/06	REVISED PER CITY REVIEW	JAK
11/30/06	REVISED PER AS-BUILT	JAK
12/28/06	REVISED PER AS-BUILT	JAK
1/25/07	EDITS PER A-B COMMENTS	JAK

PLAN DATE: 12/16/04
DESIGNED BY: MPG
DRAWN BY: RLM
PLAN CHECK BY: JAK

1ST SUBMITTAL: 01/05/05
2ND SUBMITTAL: 07/06/05
3RD SUBMITTAL: 02/15/06
4TH SUBMITTAL 04/21/06

CONSTRUCTION PLANS

EAGLECREST VIEW

ROAD AND STORM DRAINAGE PROFILES

JOB NO. 1771C

8/16

XREF: MORISC.DWG

SOUTHWEST 1/4 OF SECTION 23, TOWNSHIP 31 NORTH, RANGE 5 EAST, W.M.

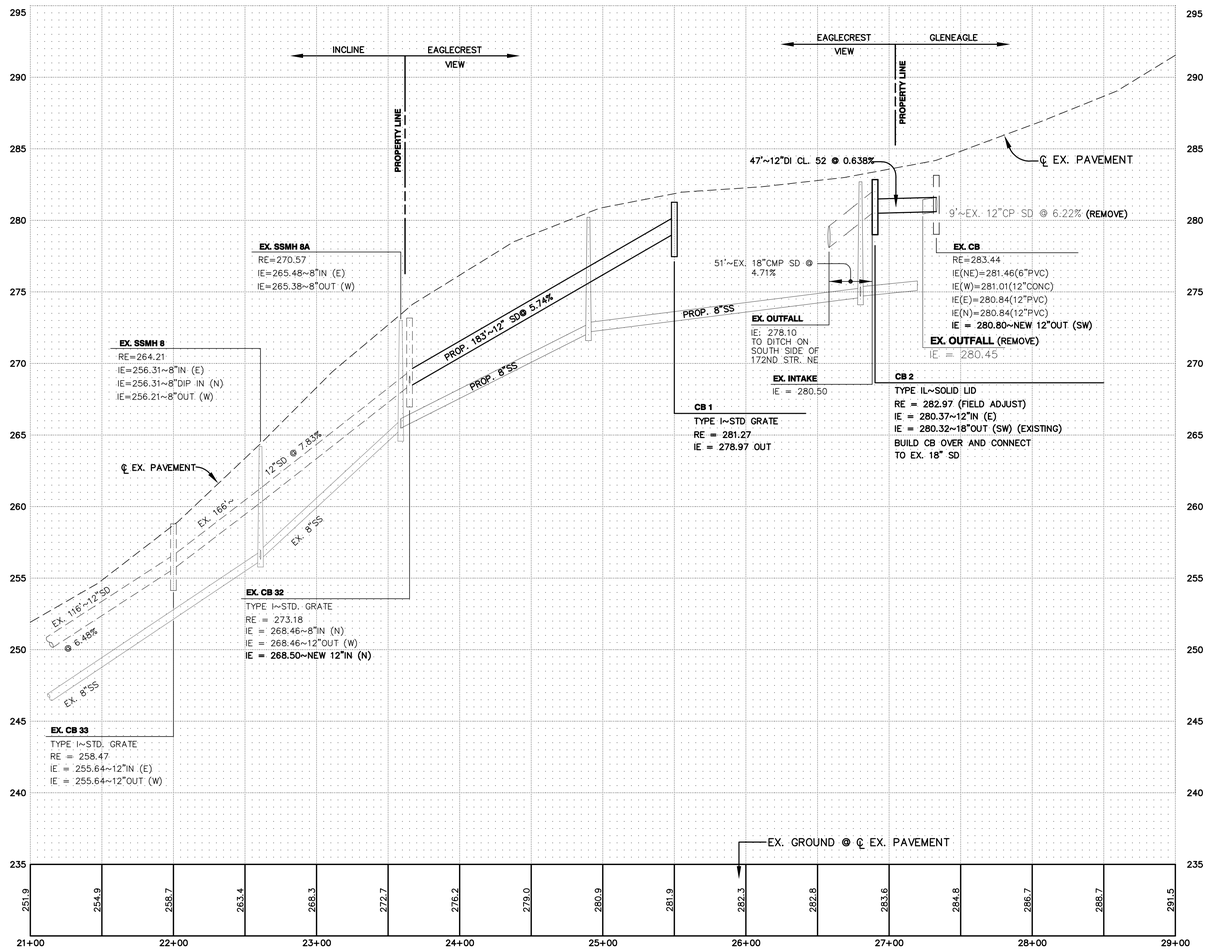

ROAD AND STORM DRAINAGE PROFILE - 172ND STREET N.E. (SR 531)

SCALE: 1" = 50' HORIZONTAL
1" = 5' VERTICAL

DATUM N.A.V.D. 1988 (BASED ON A G.P.S. TIE TO SNOHOMISH COUNTY CONTROL #1168)

BENCHMARK

BM 1 VERTICAL BENCHMARK = CASED 2" BRASS CAP MONUMENT AT THE CENTER OF MUIRFIELD COURT CUL-DE-SAC.
N.A.V.D. ELEVATION = 327.22'
(FOR CONVERSION TO N.G.V.D. 1929, SUBTRACT 3.73')

BM 2 FIRE HYDRANT
NORTH BOLT, LOWER FLANGE
ELEVATION=284.46' N.A.V.D. 88

AS-BUILT DRAWINGS

CITY OF ARLINGTON FILE NO. C-04-056-LP

HIGA-BURKHOLDER ASSOCIATES, LLC
LAND USE PLANNING / CIVIL ENGINEERING
1721 Hewitt Avenue ■ Suite 401
Everett, Washington 98201
(425) 252-2826 Telephone
(425) 252-9551 Fax
150 North Seventh Street
Springfield, Oregon 97477
Telephone (541) 988-1862
Fax (541) 988-1863

JAMES A. KRESGE
STATE OF WASHINGTON
15791
REGISTERED
PROFESSIONAL ENGINEER
EXPIRES 3/17/2008

CITY OF ARLINGTON
THIS SHEET HAS BEEN APPROVED PER CONDITIONS ON THE COVER SHEET

CONSTRUCTION	AS-BUILT ACKNOWLEDGEMENT
BY: _____ CITY ENGINEER	BY: _____ CITY ENGINEER
DATE: ____/____/____	DATE: ____/____/____

CALL 48 HOURS BEFORE YOU DIG 1-800-424-5555

DATE	REVISIONS	BY
07/05/05	REVISED PER CITY REVIEW	BOM
08/24/05	REVISED PER CITY REVIEW	BOM
02/15/06	REVISED PER CITY REVIEW	JAK
04/21/06	REVISED PER CITY REVIEW	JAK
11/30/06	REVISED PER AS-BUILT	JAK
12/28/06	REVISED PER AS-BUILT	JAK
1/25/07	EDITS PER A-B COMMENTS	JAK

PLAN DATE: 12/16/04
DESIGNED BY: MPG
DRAWN BY: RLM
PLAN CHECK BY: JAK

1ST SUBMITTAL: 01/05/05
2ND SUBMITTAL: 07/06/05
3RD SUBMITTAL: 02/15/06
4TH SUBMITTAL 04/21/06

CONSTRUCTION PLANS

EAGLECREST VIEW

ROAD AND STORM DRAINAGE PROFILE
172ND STREET N.E. (SR 531)

JOB NO. 1771C

9/16

XREF: NONE

STORM DRAINAGE NOTES

1. ALL STORM SEWER PIPE SHALL CONFORM WITH SECTION 5 OF ARLINGTON PUBLIC WORKS CONSTRUCTION STANDARDS AND SPECIFICATIONS.
2. ALL PIPE SHALL BE PLACED ON STABLE EARTH, OR IF IN THE OPINION OF THE INSPECTOR THE EXISTING FOUNDATION IS UNSATISFACTORY, THEN IT SHALL BE EXCAVATED BELOW GRADE AND BACK-FILLED WITH A GRAVEL MATERIAL TO SUPPORT THE PIPE.
3. THE BACK FILL SHALL BE PLACED EQUALLY ON BOTH SIDES OF THE PIPE IN LAYERS WITH A LOOSE AVERAGE DEPTH OF 6", MAXIMUM DEPTH 8"-9", THOROUGHLY STAMPING EACH LAYER. THESE COMPACTED LAYERS MUST EXTEND FOR ONE DIAMETER ON EACH SIDE OF THE PIPE OR TO THE SIDE OF THE TRENCH. MATERIALS TO COMPLETE THIS FILL OVER PIPE SHALL BE THE SAME AS DESCRIBED. (REFER TO WSDOT STANDARD SPECIFICATIONS 7-04.3(3) AND 2-03.2(14)C, METHOD B & C).
4. CATCH BASIN OFFSETS ARE MEASURED TO CENTER OF GRATE.
5. ALL CATCH BASINS SHALL BE TYPE 1 PER SD 2, EXCEPT AS OTHERWISE NOTED.
6. ALL CATCH BASINS WITH A DEPTH OVER 5.0 FEET TO THE FLOW LINE SHALL BE A TYPE II CB OR LARGER (MANHOLE).
7. THE CONTRACTOR SHALL BE RESPONSIBLE FOR ADJUSTING ALL MANHOLE, INLET AND CATCH BASIN FRAMES AND GRATES TO GRADE JUST PRIOR TO POURING CURBS AND PAVING.
8. CATCH BASIN FRAME AND GRATES SHALL BE OLYMPIC FOUNDRY MODEL 5435, LOCKING TYPE OR EQUAL.
9. UNLESS OTHERWISE NOTED, ALL STORM SEWER PIPE SHALL BE CORRUGATED POLYETHYLENE PIPE: THE MATERIAL SUPPLIED UNDER THIS SPECIFICATION SHALL BE HIGH-DENSITY CORRUGATED POLYETHYLENE SMOOTH INTERIOR PIPE AND SHALL BE MANUFACTURED IN CONFORMITY WITH THE LATEST AASHTO SPECIFICATIONS OR M 294 TYPE S AND THE MATERIAL COMPOUND SHALL CONFORM TO AASHTO M 294. COUPLERS SHALL COVER NOT LESS THAN ONE FULL CORRUGATION ON EACH ANNULAR SECTION OF PIPE AND PASS THE WSDOT STANDARD SPECIFICATION SECTION 7-04.3(4)D LOW PRESSURE AIR TEST FOR STORM SEWERS.
10. GALVANIZED STEEL PIPE SHALL HAVE TYPE 1 ASPHALT COATING. ALUMINIZED PIPE DOES NOT REQUIRE COATING.
11. STORM WATER RETENTION/DETENTION FACILITIES, STORM DRAINAGE PIPE AND CATCH BASINS SHALL BE FLUSHED AND CLEANED PRIOR TO ARLINGTON PUBLIC WORKS ACCEPTANCE.

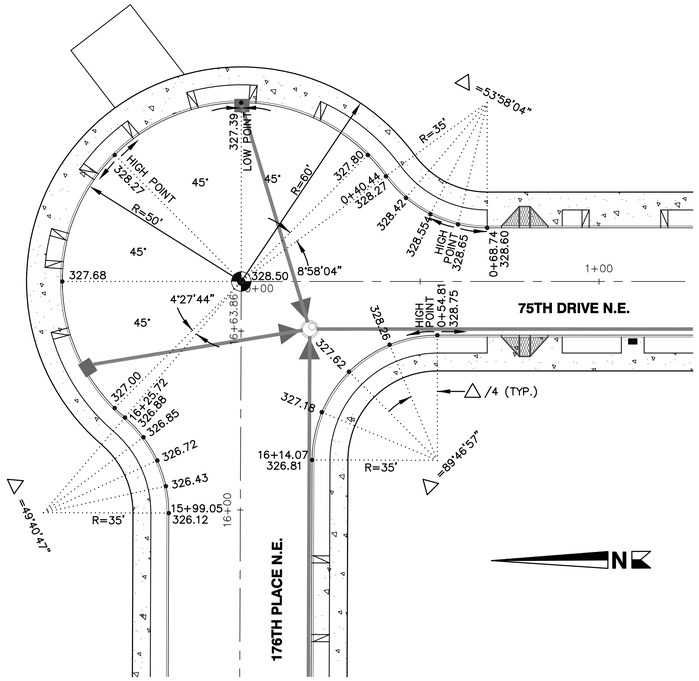

INTERSECTION OF 176TH PLSACE N.E. AND 75TH DRIVE N.E.
SCALE: 1" = 20'

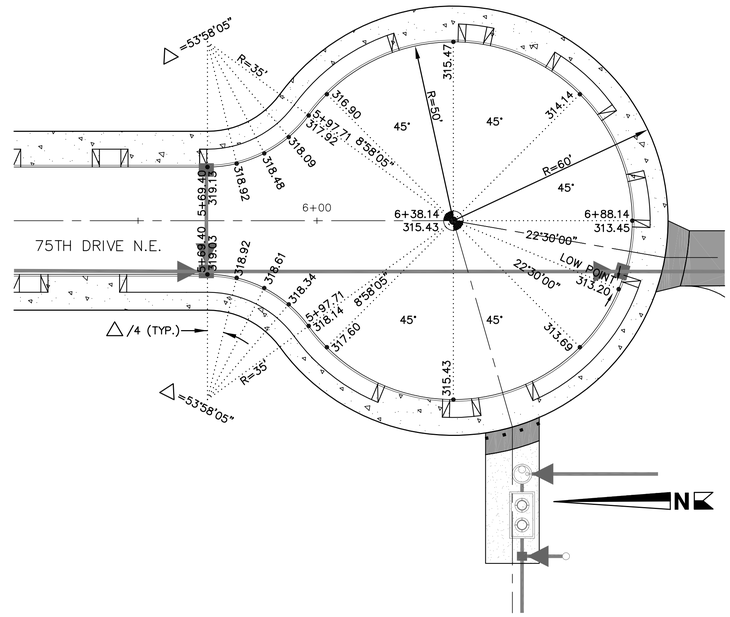

75TH DRIVE N.E. CUL-DE-SAC
SCALE: 1" = 20'

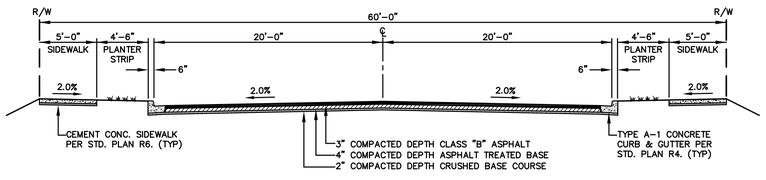

TYPICAL SECTION
176TH PLACE N.E.

NOT TO SCALE

NOTE
FOR ADDITIONAL INFORMATION SEE CITY STD. PLAN R1

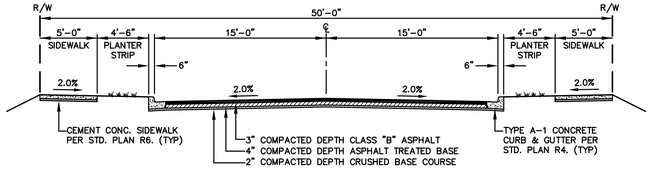

TYPICAL SECTION
75TH DRIVE N.E.

NOT TO SCALE

NOTE
FOR ADDITIONAL INFORMATION SEE CITY STD. PLAN R1

DATUM N.A.V.D. 1988 (BASED ON A G.P.S. TIE TO SNOHOMISH COUNTY CONTROL #1168)

BENCHMARK

BM 1 VERTICAL BENCHMARK = CASED 2" BRASS CAP MONUMENT AT THE CENTER OF MUIRFIELD COURT CUL-DE-SAC.
N.A.V.D. ELEVATION = 327.22'
(FOR CONVERSION TO N.G.V.D. 1929, SUBTRACT 3.73')

BM 2 FIRE HYDRANT
NORTH BOLT, LOWER FLANGE
ELEVATION=284.46' N.A.V.D. 88

AS-BUILT DRAWINGS

CITY OF ARLINGTON FILE NO. C-04-056-LP

HIGA-BURKHOLDER ASSOCIATES, LLC
LAND USE PLANNING / CIVIL ENGINEERING
1721 Hewitt Avenue ■ Suite 401
Everett, Washington 98201
(425) 252-2826 Telephone
(425) 252-9551 Fax
150 North Seventh Street
Springfield, Oregon 97477
Telephone (541) 988-1862
Fax (541) 988-1863

JAMES A. KREGER — STATE OF WASHINGTON — 35391 — REGISTERED PROFESSIONAL ENGINEER
EXPIRES 3/17/2008

CITY OF ARLINGTON
THIS SHEET HAS BEEN APPROVED PER CONDITIONS ON THE COVER SHEET

CONSTRUCTION	AS-BUILT ACKNOWLEDGEMENT
BY: _____ CITY ENGINEER	BY: _____ CITY ENGINEER
DATE: ____/____/____	DATE: ____/____/____

CALL 48 HOURS BEFORE YOU DIG 1-800-424-5555

DATE	REVISIONS	BY
07/05/05	REVISED PER CITY REVIEW	BOM
08/24/05	REVISED PER CITY REVIEW	BOM
02/15/06	REVISED PER CITY REVIEW	JAK
04/21/06	REVISED PER CITY REVIEW	JAK
11/30/06	REVISED PER AS-BUILT	JAK
12/28/06	REVISED PER AS-BUILT	JAK
1/25/07	EDITS PER A-B COMMENTS	JAK

PLAN DATE: 12/16/04
DESIGNED BY: MPG
DRAWN BY: RLM
PLAN CHECK BY: JAK

1ST SUBMITTAL: 01/05/05
2ND SUBMITTAL: 07/06/05
3RD SUBMITTAL: 02/15/06
4TH SUBMITTAL 04/21/06

CONSTRUCTION PLANS
EAGLECREST VIEW
CURB RETURN DETAILS, ROAD AND STORM DRAINAGE NOTES AND DETAILS

JOB NO. 1771C
10/16
XREF: NONE

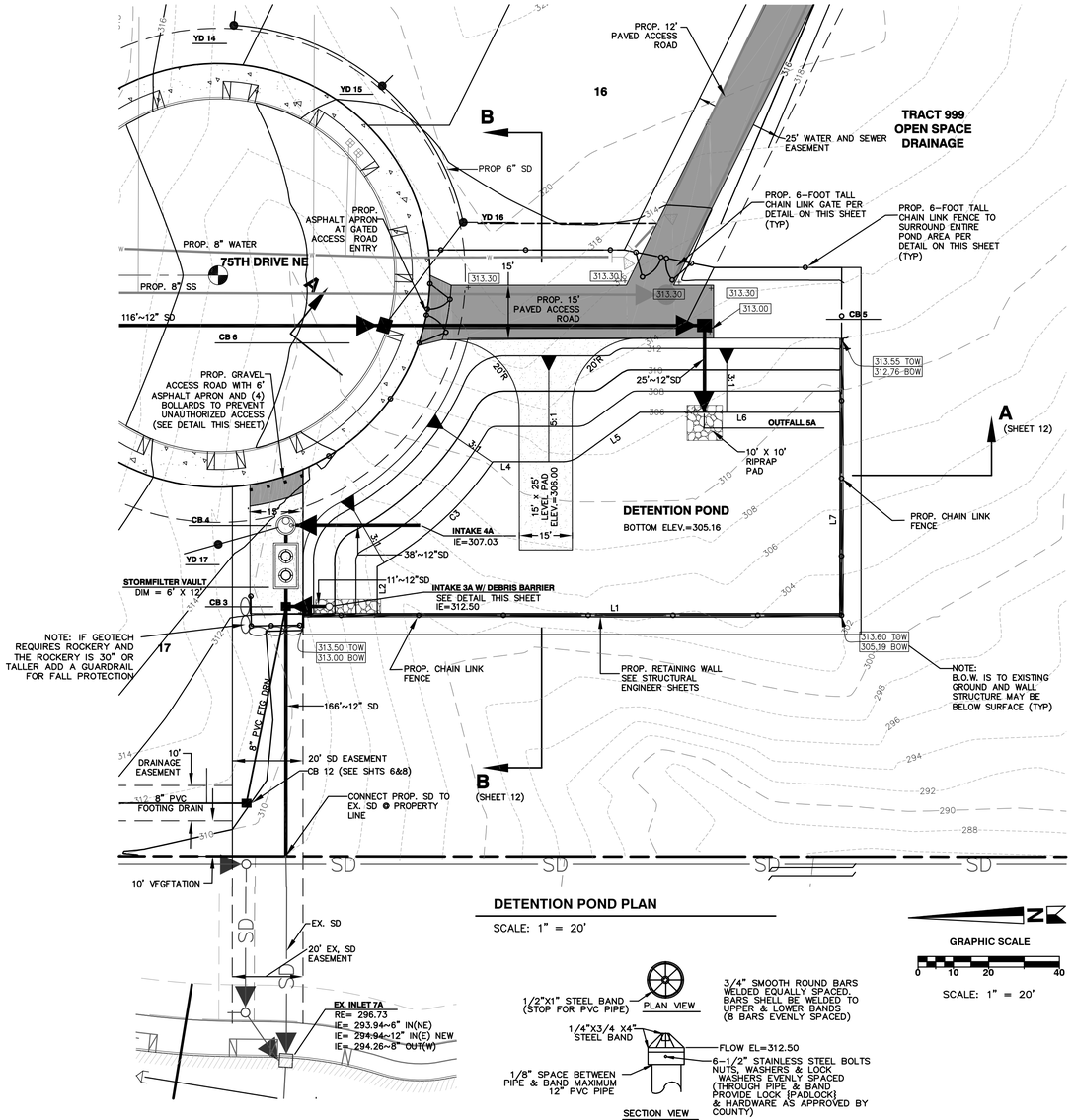

DETENTION POND PLAN

SCALE: 1" = 20'

GRAPHIC SCALE

0 10 20 40

SCALE: 1" = 20'

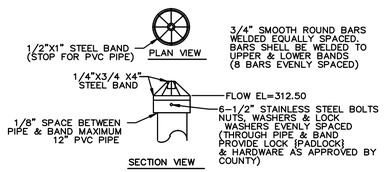

OVERFLOW STRUCTURE LID

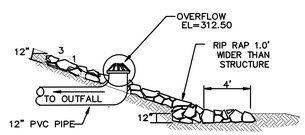

POND OVERFLOW STRUCTURE W/ DEBRIS BARRIER @ INTAKE 3A

N.T.S.

BOTTOM DIMENSIONS - DETENTION POND

LINE TABLE

LINE	BEARING	DISTANCE
L1	N01°06'30"E	131.20'
L2	N88°53'30"W	13.77'
L4	N00°46'40"E	22.57'
L5	N34°55'25"W	23.72'
L6	N01°14'29"E	56.63'
L7	N88°57'47"W	57.20'

CURVE TABLE

CURVE	RADIUS	DELTA	LENGTH	TANGENT	CHORD	CH'D BEARING
C3	94.00'	27°13'42"	44.67'	22.77'	44.25'	N40°58'29"W

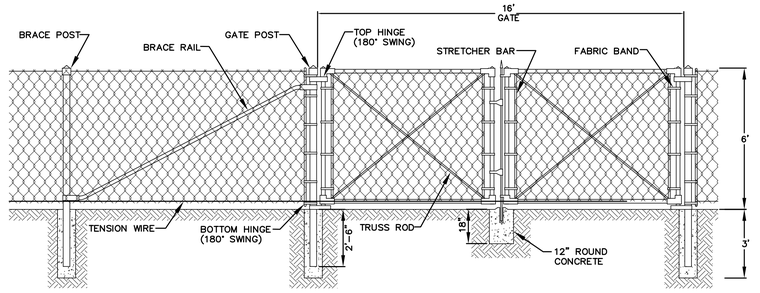

TYPICAL FENCE AND GATE AT DETENTION POND TRACT

NOT TO SCALE

NOTES:

ALL POSTS SHALL BE SPACED AT 10' MAXIMUM INTERVALS UNLESS OTHERWISE DIRECTED BY THE ENGINEER.

TOP AND BOTTOM TENSION WIRES SHALL BE PLACED WITHIN THE LIMITS OF THE FIRST FULL FABRIC WEAVE.

DETAILS ARE ILLUSTRATIVE AND SHALL NOT LIMIT HARDWARE DESIGN OR POST SELECTION FOR ANY PATICULAR FENCE TYPE.

ALL CONCRETE BASES SHALL BE CONCRETE CLASS 3000, 12" MINIMUM DIAMETER.

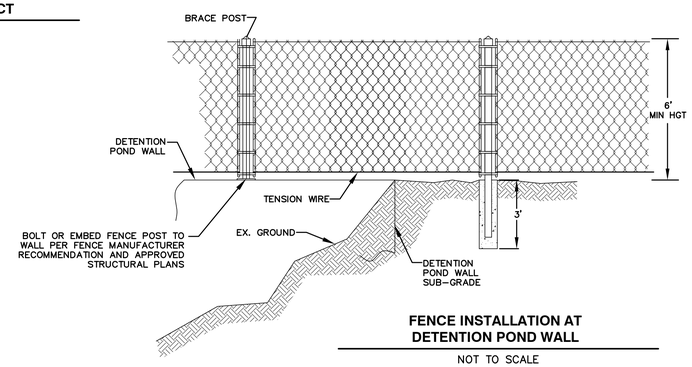

FENCE INSTALLATION AT DETENTION POND WALL

NOT TO SCALE

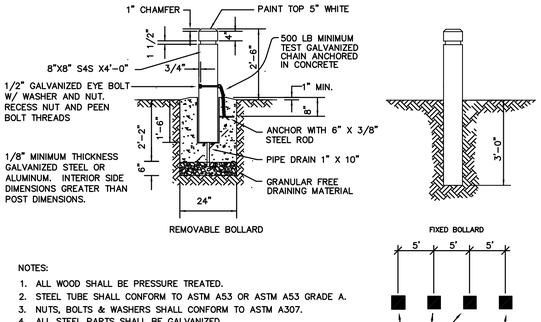

NOTES:

1. ALL WOOD SHALL BE PRESSURE TREATED.
2. STEEL TUBE SHALL CONFORM TO ASTM A53 OR ASTM A53 GRADE A.
3. NUTS, BOLTS & WASHERS SHALL CONFORM TO ASTM A307.
4. ALL STEEL PARTS SHALL BE GALVANIZED.
5. CONCRETE SHALL BE CLASS COMMERCIAL.
6. FOR ACCEPTABLE ALTERNATE BOLLARD DESIGNS, SEE WSDOT/APWA PLANS H-13 AND H-13A.

BOLLARDS DETAIL

N.T.S.

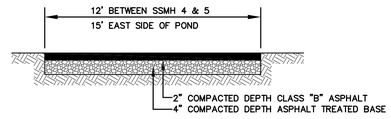

TYPICAL SECTION PAVED ACCESS ROAD

NOT TO SCALE

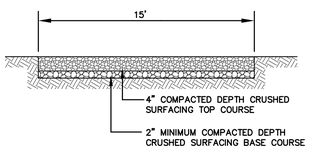

TYPICAL SECTION GRAVEL ACCESS ROAD

NOT TO SCALE

DATUM

BENCHMARK

N.A.V.D. 1988 (BASED ON A G.P.S. TIE TO SNOHOMISH COUNTY CONTROL #1168)

BM 1 VERTICAL BENCHMARK = CASED 2" BRASS CAP MONUMENT AT THE CENTER OF MUIRFIELD COURT CUL-DE-SAC.
N.A.V.D. ELEVATION = 327.22'
(FOR CONVERSION TO N.G.V.D. 1929, SUBTRACT 3.73')

BM 2 FIRE HYDRANT
NORTH BOLT, LOWER FLANGE
ELEVATION=284.46' N.A.V.D. 88

CITY OF ARLINGTON FILE NO. C-04-056-LP

AS-BUILT DRAWINGS

HIGA-BURKHOLDER ASSOCIATES, LLC
LAND USE PLANNING / CIVIL ENGINEERING
1721 Hewitt Avenue ■ Suite 401
Everett, Washington 98201
(425) 252-2826 Telephone
(425) 252-9551 Fax
150 North Seventh Street
Springfield, Oregon 97477
Telephone (541) 988-1862
Fax (541) 988-1863

JAMES A. KREGGE — STATE OF WASHINGTON — 15391 — REGISTERED PROFESSIONAL ENGINEER
EXPIRES 3/17/2008

CITY OF ARLINGTON

THIS SHEET HAS BEEN APPROVED PER CONDITIONS ON THE COVER SHEET

CONSTRUCTION	AS-BUILT ACKNOWLEDGEMENT
BY: _____ CITY ENGINEER	BY: _____ CITY ENGINEER
DATE: ____ /____ /____	DATE: ____ /____ /____

CALL 48 HOURS BEFORE YOU DIG 1-800-424-5555

DATE	REVISIONS	BY
07/05/05	REVISED PER CITY REVIEW	BOM
08/24/05	REVISED PER CITY REVIEW	BOM
02/15/06	REVISED PER CITY REVIEW	JAK
04/21/06	REVISED PER CITY REVIEW	JAK
11/30/06	REVISED PER AS-BUILT	JAK
12/28/06	REVISED PER AS-BUILT	JAK
1/25/07	EDITS PER A-B COMMENTS	JAK

PLAN DATE:	12/16/04
DESIGNED BY:	MPG
DRAWN BY:	RLM
PLAN CHECK BY:	JAK
1ST SUBMITTAL:	01/05/05
2ND SUBMITTAL:	07/06/05
3RD SUBMITTAL:	02/15/06
4TH SUBMITTAL	04/21/06

CONSTRUCTION PLANS

EAGLECREST VIEW

DETENTION POND PLAN

JOB NO. 1771C

11/16

XREF: NONE

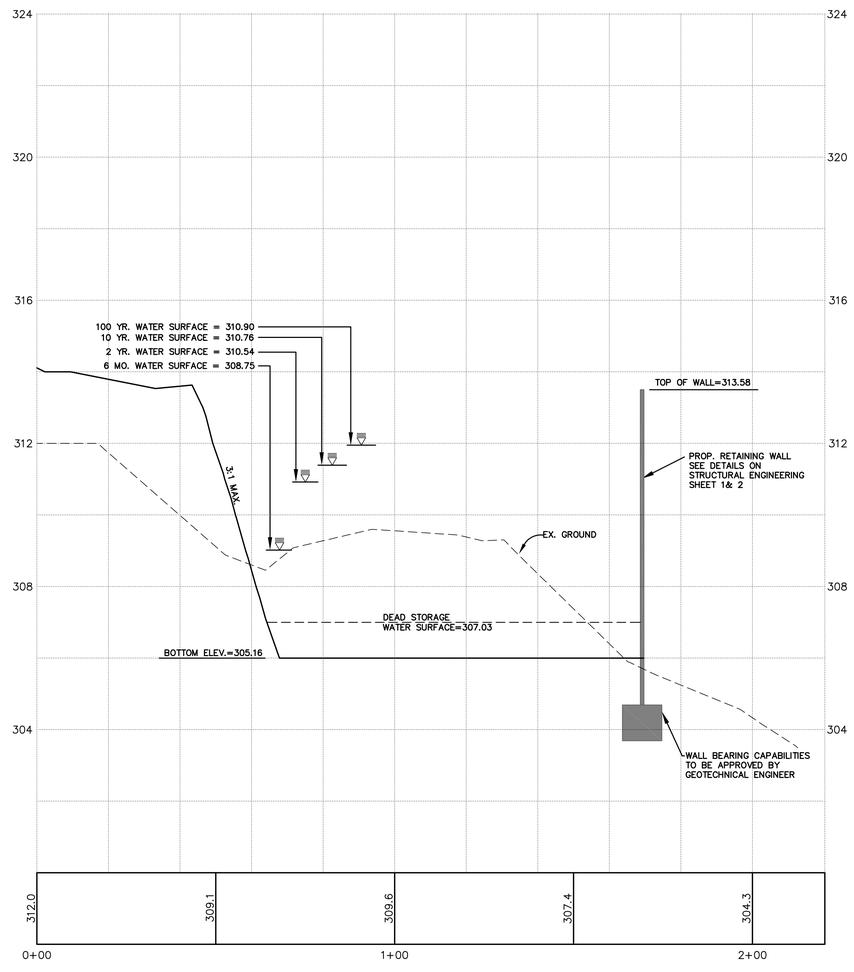

SECTION A-A

SCALE: 1" = 20' HORIZONTAL
1" = 2' VERTICAL

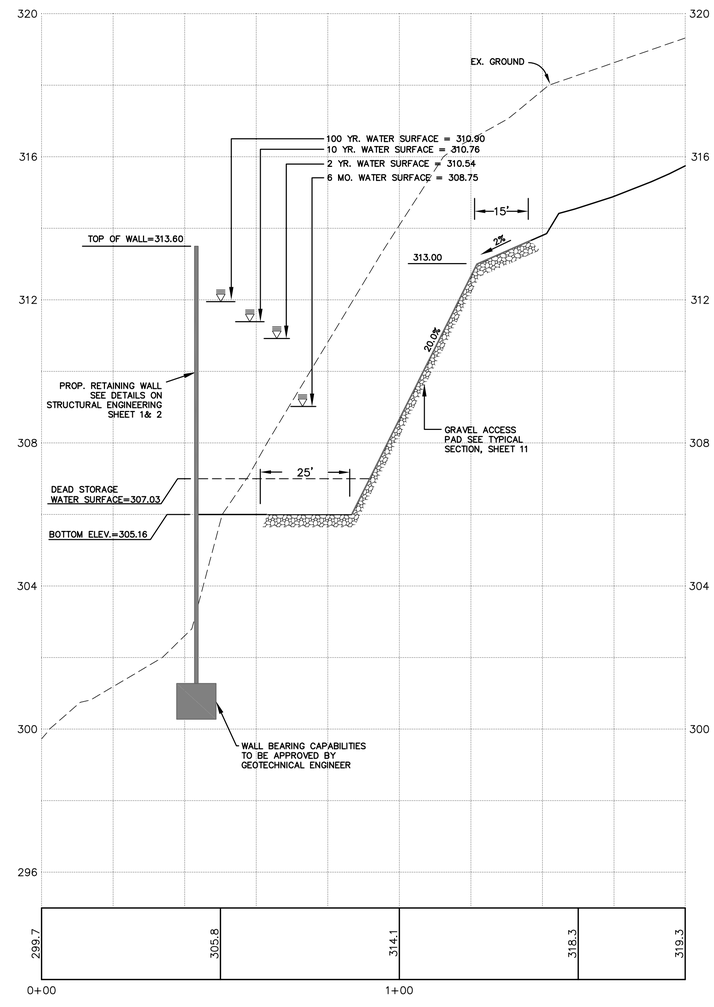

SECTION B-B

SCALE: 1" = 20' HORIZONTAL
1" = 2' VERTICAL

DETENTION POND WALL CONSTRUCTION NOTES

1.) A SEPARATE BUILDING PERMIT MUST BE OBTAINED FOR STRUCTURAL WALL CONSTRUCTION.

2.) A FOOTING MEMO MUST BE OBTAINED PRIOR TO DETENTION POND WALL CONSTRUCTION.

3.) SPECIAL INSPECTIONS ARE REQUIRED FOR REBAR CLEARANCE, CONCRETE PLACEMENT AND TESTING BY CASCADE TESTING LABRATORIES. THE RESULTS OF THE SPECIAL TESTING IS TO BE FORWARDED TO THE CITY OF ARLINGTON BUILDING DEPARTMENT. A FINAL LETTER WILL FOLLOW AT COMPLETION OF CONSTRUCTION.

4.) ALL CONCRETE CLEANUP WILL BE RESTRICTED TO A SINGLE "WASH OUT" AREA (SEE SHEET 4 FOR LOCATION).

DATUM N.A.V.D. 1988 (BASED ON A G.P.S. TIE TO SNOHOMISH COUNTY CONTROL #1168)

BENCHMARK

BM 1 VERTICAL BENCHMARK = CASED 2" BRASS CAP MONUMENT AT THE CENTER OF MUIRFIELD COURT CUL-DE-SAC.
N.A.V.D. ELEVATION = 327.22'
(FOR CONVERSION TO N.G.V.D. 1929, SUBTRACT 3.73')

BM 2 FIRE HYDRANT
NORTH BOLT, LOWER FLANGE
ELEVATION=284.46' N.A.V.D. 88

AS-BUILT DRAWINGS

CITY OF ARLINGTON FILE NO. C-04-056-LP

HIGA-BURKHOLDER ASSOCIATES, LLC
LAND USE PLANNING / CIVIL ENGINEERING
1721 Hewitt Avenue ■ Suite 401
Everett, Washington 98201
(425) 252-2826 Telephone
(425) 252-9551 Fax
150 North Seventh Street
Springfield, Oregon 97477
Telephone (541) 988-1862
Fax (541) 988-1863

JAMES A. KREGER — STATE OF WASHINGTON — 19091 — REGISTERED PROFESSIONAL ENGINEER
EXPIRES 3/17/2008

CITY OF ARLINGTON
THIS SHEET HAS BEEN APPROVED PER CONDITIONS ON THE COVER SHEET

CONSTRUCTION	AS-BUILT ACKNOWLEDGEMENT
BY: _____ CITY ENGINEER	BY: _____ CITY ENGINEER
DATE: ____ /____ /____	DATE: ____ /____ /____

CALL 48 HOURS BEFORE YOU DIG 1-800-424-5555

DATE	REVISIONS	BY
07/05/05	REVISED PER CITY REVIEW	BOM
08/24/05	REVISED PER CITY REVIEW	BOM
02/15/06	REVISED PER CITY REVIEW	JAK
04/21/06	REVISED PER CITY REVIEW	JAK
11/30/06	REVISED PER AS-BUILT	JAK
12/28/06	REVISED PER AS-BUILT	JAK
1/25/07	EDITS PER A-B COMMENTS	JAK

PLAN DATE: 12/16/04
DESIGNED BY: MPG
DRAWN BY: RLM
PLAN CHECK BY: JAK

1ST SUBMITTAL: 01/05/05
2ND SUBMITTAL: 07/06/05
3RD SUBMITTAL: 02/15/06
4TH SUBMITTAL 04/21/06

CONSTRUCTION PLANS

EAGLECREST VIEW
DETENTION POND
OUTFALL PROFILE AND SECTIONS

JOB NO. 1771C

SHEET 12/16

XREF: XCROSS.DWG

NOTE:
DETENTION BASIN CONCRETE WALLS SHALL BE CONSTRUCTED ACCORDING TO DESIGNS FURNISHED BY A STRUCTURAL ENGINEER CURRENTLY LICENSED IN THE WASHINGTON STATE.

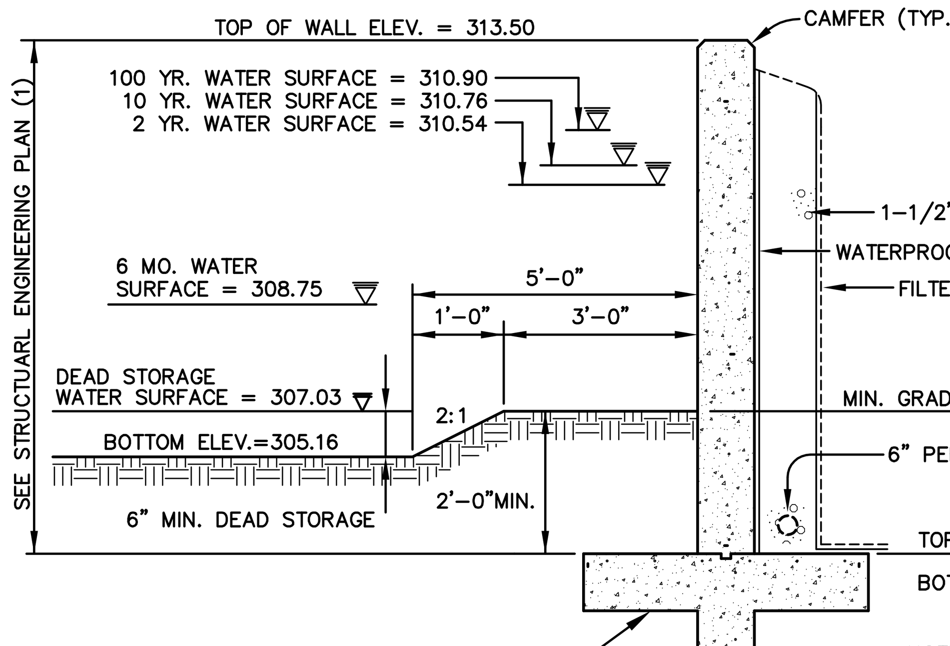

NOTE:
(1) THIS DETAIL IS FOR DIMENSIONAL PURPOSES ONLY. THE WALL SHALL BE DESIGN BY A REGISTERED STRUCTURAL ENGINEER.

SEE STRUCTURAL PLANS FOR DETAILS OF WALL CONSTRUCTION, SEE S1 & S2

DETAIL
DETENTION BASIN RETAINING WALL

NOT TO SCALE

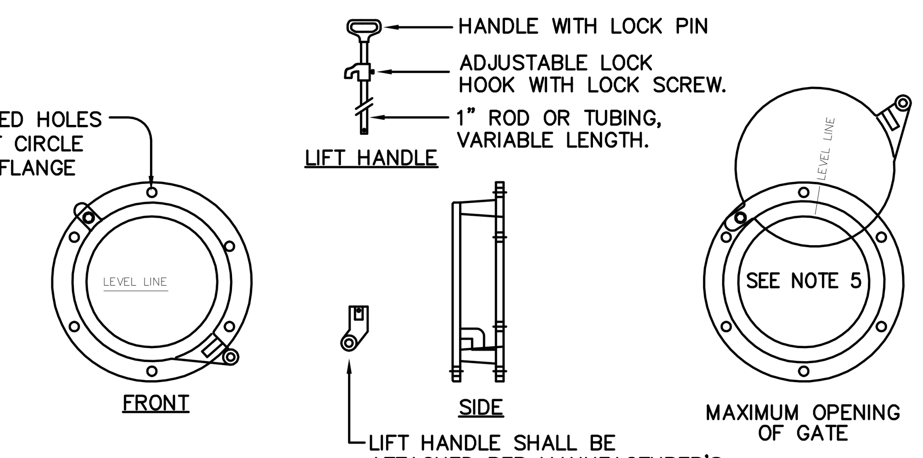

NOTES:

1. SHEAR GATE SHALL BE ALUMINUM ALLOY PER ASTM B-26-ZG-32a OR CAST IRON ASTM A48 CLASS 30B AS REQUIRED.
2. GATE SHALL BE 8" DIAM. UNLESS OTHERWISE SPECIFIED.
3. GATE SHALL BE JOINED TO TEE SECTION BY BOLTING (THROUGH FLANGE), WELDING, OR OTHER SECURE MEANS.
4. LIFT ROD: AS SPECIFIED BY MFR. WITH HANDLE EXTENDING TO WITHIN ONE FOOT OF COVER AND ADJUSTABLE HOOK LOCK FASTENED TO FRAME OR UPPER HANDHOLD.
5. GATE SHALL NOT OPEN BEYOND THE CLEAR OPENING BY LIMITED HINGE MOVEMENT, STOP TAB, OR SOME OTHER DEVICE.
6. NEOPRENE RUBBER GASKET REQUIRED BETWEEN RISER MOUNTING FLANGE AND GATE FLANGE.
7. MATING SURFACES OF LID AND BODY TO BE MACHINED FOR PROPER FIT.
8. FLANGE MOUNTING BOLTS SHALL BE 3/8" DIAM. STAINLESS STEEL.
9. ALTERNATE CLEANOUT/SHEAR GATES TO THE DESIGN SHOWN ARE ACCEPTABLE, PROVIDED THEY MEET THE MATERIAL SPECIFICATIONS ABOVE AND HAVE A SIX BOLT, 10 3/8" BOLT CIRCLE FOR BOLTING TO THE FLANGE CONNECTION.

DETAIL
FROP-T SHEAR GATE

NOT TO SCALE

6' x 12' PRECAST STORMFILTER DATA

STRUCTURE ID			N/A
WATER QUALITY FLOW RATE (cfs)			0.20
PEAK FLOW RATE (cfs)			1.59
RETURN PERIOD OF PEAK FLOW (yrs)			100
# OF CARTRIDGES REQUIRED			12
CARTRIDGE FLOW RATE (15 OR 7.5 gpm)			7.5
MEDIA TYPE (CSF, PERLITE, ZPG)			CSF
PIPE DATA:	I.E.	MATERIAL	DIAMETER
INLET PIPE #1	307.00'	XXX	12"
INLET PIPE #2	N/A	N/A	N/A
OUTLET PIPE	304.70'	XXX	12"
RIM	314.5'		314.5'
LADDER			YES
ANTI-FLOTATION BALLAST		WIDTH	HEIGHT
		N/A	N/A
NOTES/SPECIAL REQUIREMENTS:			

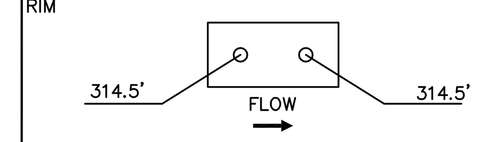

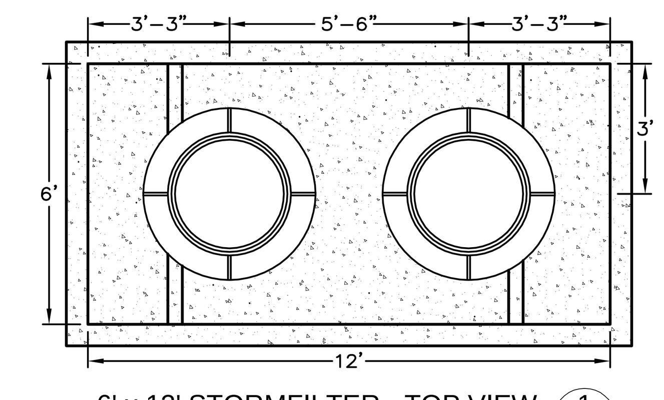

6' x 12' STORMFILTER - TOP VIEW 1/2
©2005 Stormwater360

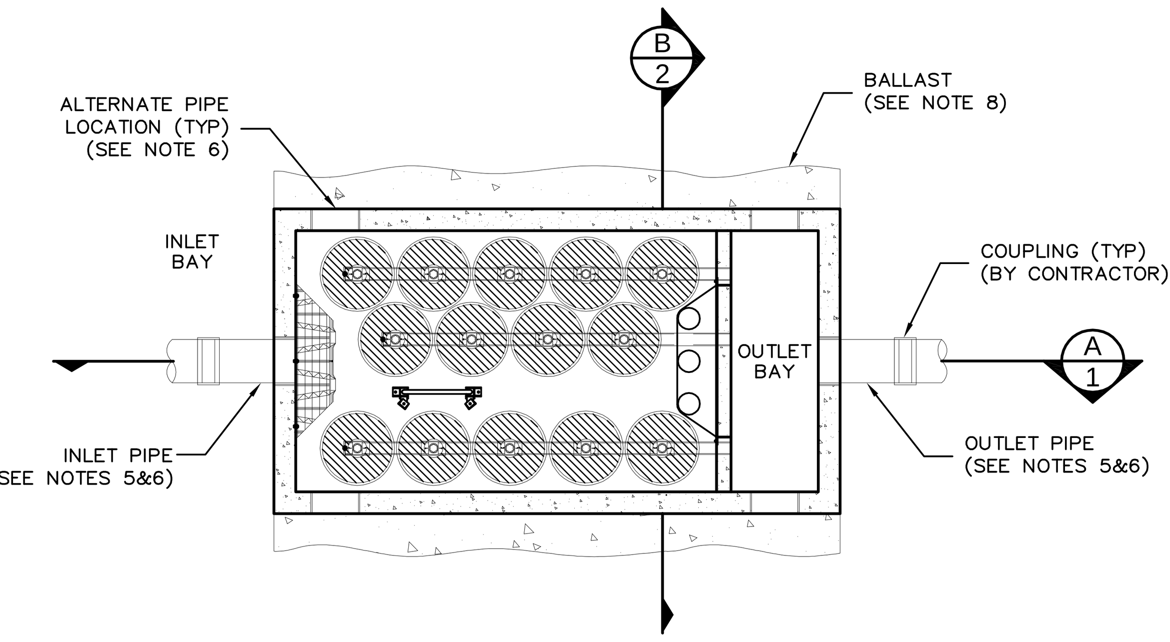

6' x 12' STORMFILTER - PLAN VIEW 1/1
©2005 Stormwater360

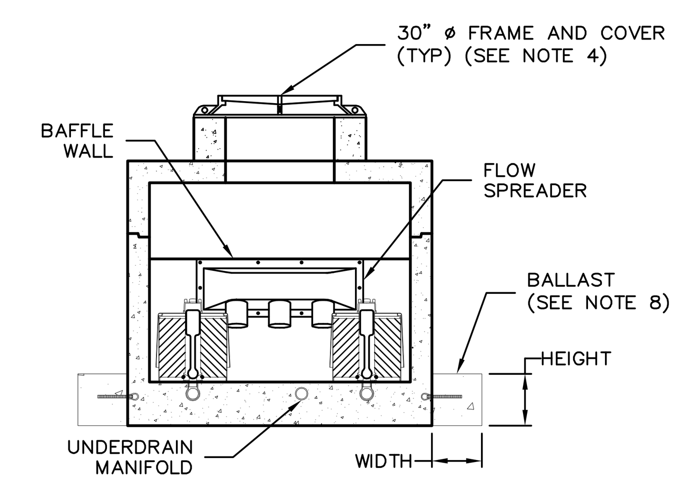

6' x 12' STORMFILTER - SECTION VIEW B/2
©2005 Stormwater360

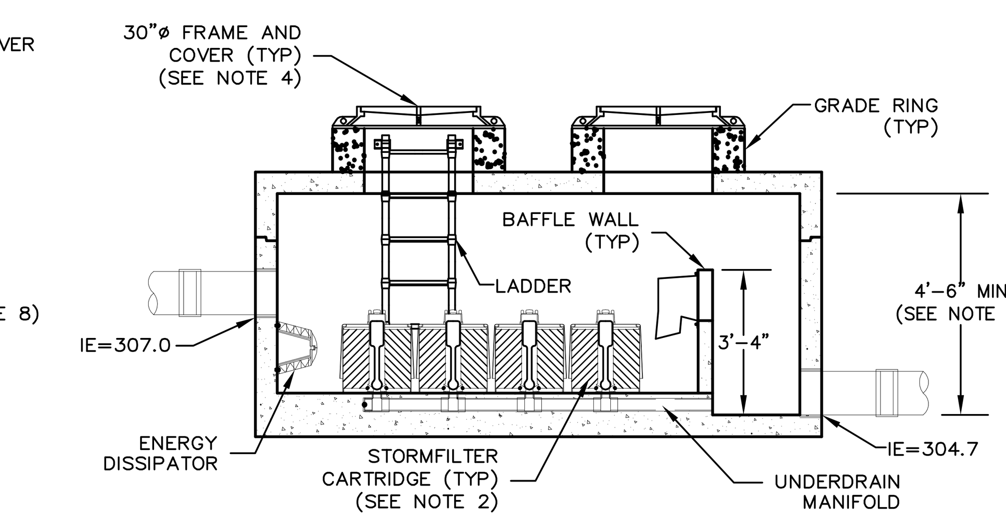

6' x 12' STORMFILTER - SECTION VIEW A/1
©2005 Stormwater360

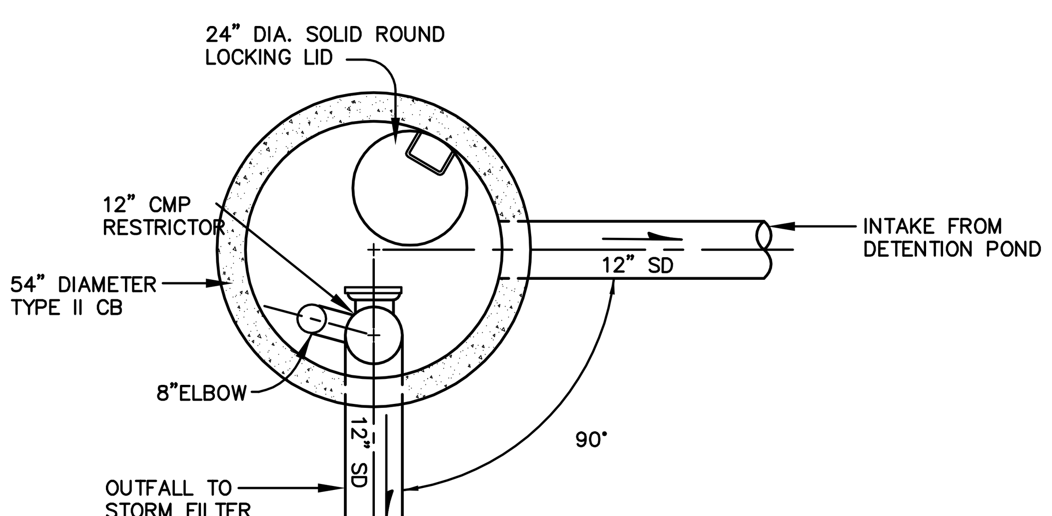

PLAN

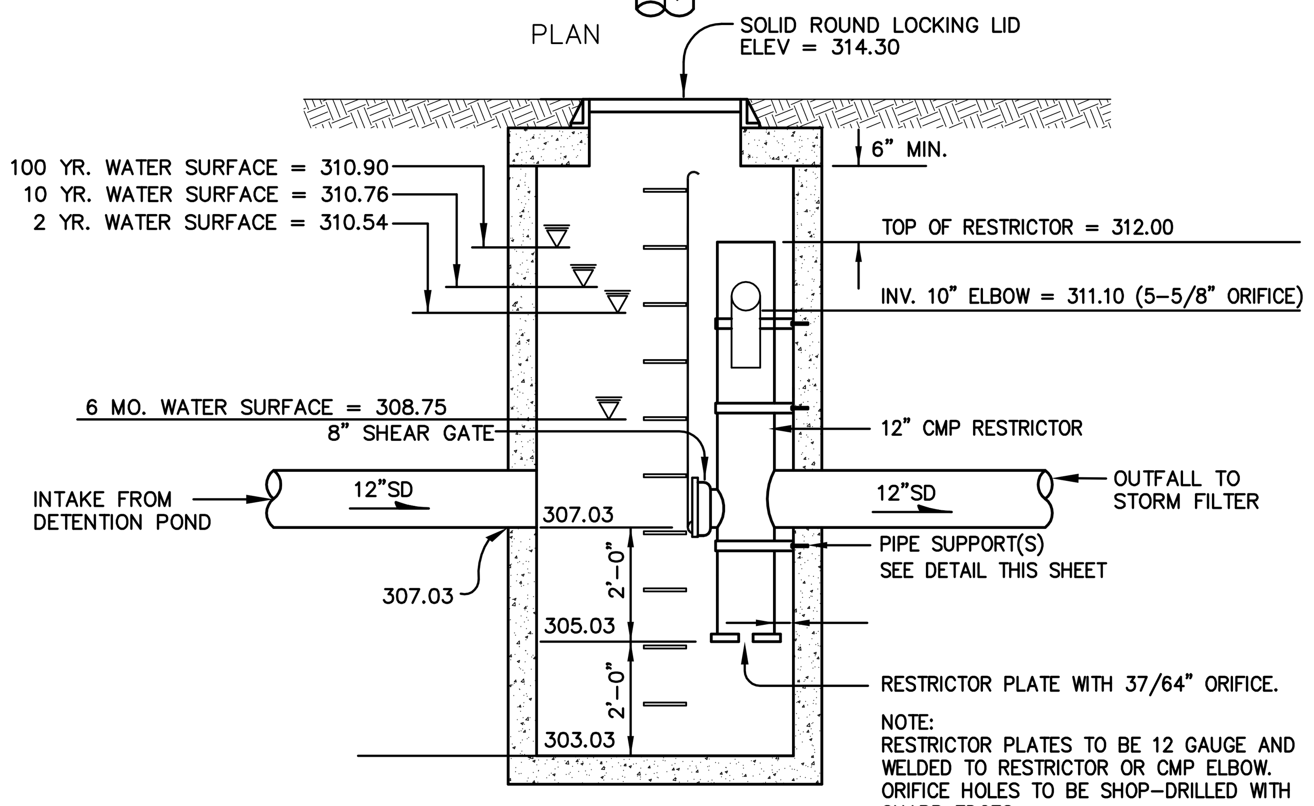

ELEVATION

DETAIL
CB 4 - TYPE II - 54" DIAMETER

NOT TO SCALE

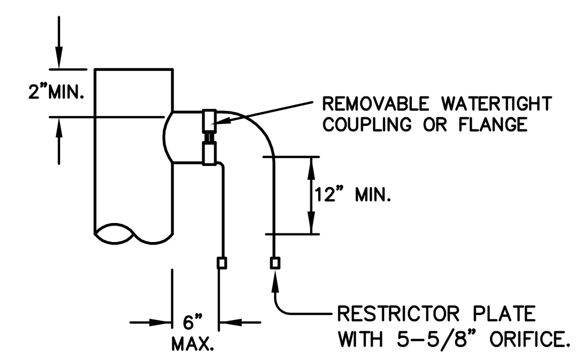

RESTRICTOR ELBOW DETAIL

NOT TO SCALE

1. PIPE SIZES AND SLOPES: PER PLANS.
2. OUTLET CAPACITY: NOT LESS THAN COMBINED INLETS.
3. EXCEPT AS SHOWN OR NOTED, UNITS SHALL BE CONSTRUCTED IN ACCORDANCE WITH THE REQUIREMENTS FOR CATCH BASIN TYPE II, 54" MIN. DIAM.
4. PIPE SUPPORTS AND RESTRICTOR/SEPARATOR SHALL BE OF SAME MATERIAL, AND BE ANCHORED AT 3' MAX. SPACING BY 5/8" DIAM. STAINLESS STEEL EXPANSION BOLTS OR EMBEDDED 2" IN WALL.
5. THE RESTRICTOR/SEPARATOR SHALL BE FABRICTED FROM .060" ALUMINUM, OR .064" ALUMINIZED STEEL, OR .064" GALVANIZED STEEL PIPE; IN ACCORDANCE WITH AASHTO M 36, M 196, M 197 AND M 274. GALVANIZED STEEL SHALL HAVE TREATMENT 1.
6. OUTLET SHALL BE CONNECTED TO CULVERT OR STORM DRAIN WITH A STANDARD COUPLING BAND FOR CORRUGATED METAL PIPE, OR GROUTED INTO THE BELL OF CONCRETE PIPE.
7. THE VERTICAL RISER STEM OF THE RESTICTOR/SEPARATOR SHALL BE THE SAME DIAM. AS THE HORIZONTAL OUTLET PIPE, WITH AN 8" MIN. DIAM.
8. FRAME AND LADDER OR STEPS OFFSET SO THAT:
   A. CLEANOUT GATE IS VISIBLE FROM TOP.
   B. CLIMB DOWN SPACE IS CLEAR OF RISER AND CLEANOUT GATE.
   C. FRAME IS CLEAR OF CURB.
9. IF METAL OUTLET PIPE CONNECTS TO CEMENT CONCRETE PIPE: OUTLET PIPE TO HAVE SMOOTH O.D. EQUAL TO CONCRETE PIPE I.D. LESS 1/4".
10. MULTI-ORIFICE ELBOWS MAY BE LOCATED AS SHOWN OR ALL ON ONE SIDE OF RISER TO ASSURE LADDER CLEARANCE.

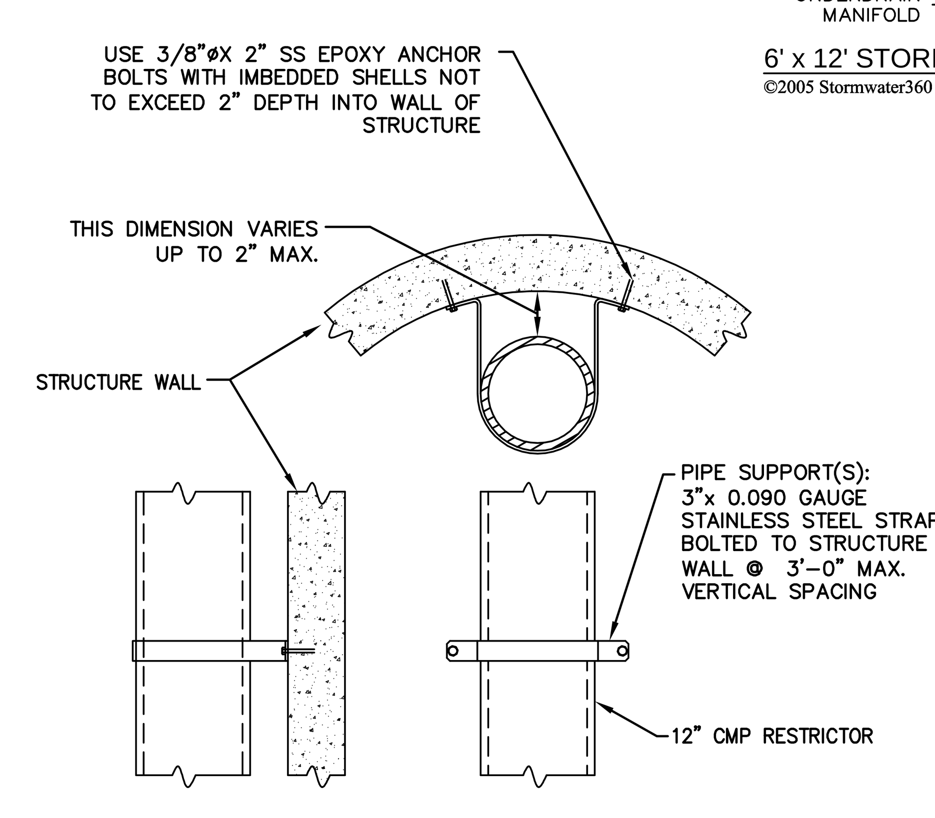

RESTRICTOR PIPE ATTACHMENT DETAIL

NOT TO SCALE

GENERAL NOTES

©2005 Stormwater360

1) STORMFILTER BY STORMWATER360 (S360), PORTLAND, OREGON (800) 548-4667.
2) FILTER CARTRIDGE(S) TO BE SIPHON-ACTUATED AND SELF-CLEANING. STANDARD DETAIL DRAWING SHOWS MAXIMUM NUMBER OF CARTRIDGES. ACTUAL NUMBER REQUIRED TO BE SPECIFIED ON SITE PLANS OR IN DATA TABLE BELOW.
3) PRECAST VAULT TO BE CONSTRUCTED IN ACCORDANCE WITH ASTM C857 AND C858. DETAIL DRAWING REFLECTS DESIGN INTENT ONLY. ACTUAL DIMENSIONS AND CONFIGURATION OF STRUCTURE WILL BE SHOWN ON PRODUCTION SHOP DRAWING.
4) STRUCTURE AND ACCESS COVERS TO MEET AASHTO H-20 LOAD RATING.
5) STORMFILTER REQUIRES 2.3 FEET OF DROP FROM INLET TO OUTLET. IF LESS DROP IS AVAILABLE, CONTACT S360.
6) INLET AND OUTLET PIPING TO BE SPECIFIED BY ENGINEER AND PROVIDED BY CONTRACTOR. PRECAST STORMFILTER VAULT EQUIPPED WITH EITHER CORED OPENINGS OR KNOCKOUTS AT INLET AND OUTLET LOCATIONS.
7) PROVIDE MINIMUM CLEARANCE FOR MAINTENANCE ACCESS. IF A SHALLOWER SYSTEM IS REQUIRED, CONTACT S360 FOR OTHER OPTIONS.
8) ANTI-FLOTATION BALLAST TO BE SPECIFIED BY ENGINEER AND PROVIDED BY CONTRACTOR, IF REQUIRED. BALLAST TO BE SET ALONG ENTIRE LENGTH OF BOTH SIDES OF THE STRUCTURE.
9) ALL STORMFILTERS REQUIRE REGULAR MAINTENANCE. REFER TO OPERATION AND MAINTENANCE GUIDELINES FOR MORE INFORMATION.

Stormwater360 A CONTECH Company
www.stormwater360.com

6' X 12' PRECAST STORMFILTER PLAN AND SECTION VIEWS, STANDARD NOTES AND DETAILS

NOT TO SCALE

AS-BUILT DRAWINGS

CITY OF ARLINGTON FILE NO. C-04-056-LP

HIGA-BURKHOLDER ASSOCIATES, LLC
LAND USE PLANNING / CIVIL ENGINEERING
1721 Hewitt Avenue ■ Suite 401
Everett, Washington 98201
(425) 252-2826 Telephone
(425) 252-9551 Fax
150 North Seventh Street
Springfield, Oregon 97477
Telephone (541) 988-1862
Fax (541) 988-1863

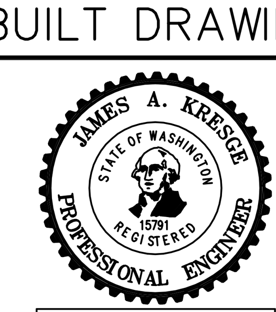

EXPIRES 3/17/2008

CITY OF ARLINGTON
THIS SHEET HAS BEEN APPROVED PER CONDITIONS ON THE COVER SHEET

CONSTRUCTION	AS-BUILT ACKNOWLEDGEMENT
BY: ______ CITY ENGINEER	BY: ______ CITY ENGINEER
DATE: ____ /____ /____	DATE: ____ /____ /____

CALL 48 HOURS BEFORE YOU DIG 1-800-424-5555

DATE	REVISIONS	BY
07/05/05	REVISED PER CITY REVIEW	BOM
08/24/05	REVISED PER CITY REVIEW	BOM
02/15/06	REVISED PER CITY REVIEW	JAK
04/21/06	REVISED PER CITY REVIEW	JAK
11/30/06	REVISED PER AS-BUILT	JAK
12/28/06	REVISED PER AS-BUILT	JAK
1/25/07	EDITS PER A-B COMMENTS	JAK

PLAN DATE: 12/16/04
DESIGNED BY: MPG
DRAWN BY: RLM
PLAN CHECK BY: JAK

1ST SUBMITTAL: 01/05/05
2ND SUBMITTAL: 07/06/05
3RD SUBMITTAL: 02/15/06
4TH SUBMITTAL 04/21/06

CONSTRUCTION PLANS

EAGLECREST VIEW

DETENTION POND AND DETENTION PIPE DETAILS

JOB NO. 1771C

XREF: MORISC.DWG

SOUTHWEST 1/4 OF SECTION 23, TOWNSHIP 31 NORTH, RANGE 5 EAST, W.M.

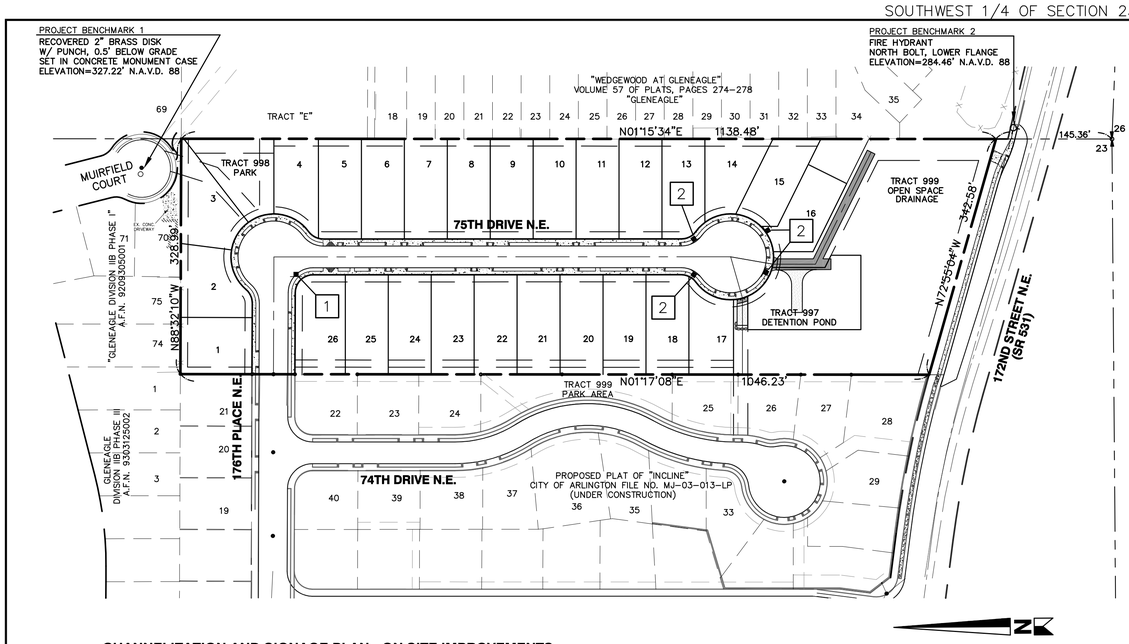

CHANNELIZATION AND SIGNAGE PLAN - ON SITE IMPROVEMENTS

SCALE: 1"=100'

NOTES:

1.) SEE SHEET 7 FOR THE NEW STORM DRAINAGE SYSTEM ALONG SR 531 DUE TO THE ROAD WIDENING

2.) SEE SHEET 10 FOR TYPICAL ROAD SECTIONS OF 176TH PLACE N.E. AND 75TH DRIVE N.E.

CHANNELIZATION/SIGNING NOTES

1. ALL SIGNS SHALL BE APPROVED BY THE CITY ENGINEER PRIOR TO INSTALLATION.
2. STREET NAME SIGNS SHALL BE 6" HIGH ALUMINUM BLANKS WITH BLUE BACKGROUND AND 4" WHITE LETTERING, WITH REFLECTIVE SHEETING.
3. STREET NAME SIGNS SHALL SHOW DIRECTION (NORTH, SOUTH, EAST, WEST).
4. ALL STREET NAME SIGNS SHALL BE DOUBLE-FACED. STREET NAME SIGNS SHALL BE PLACED ON TOP OF STOP SIGN POSTS WHERE APPLICABLE.
5. SIGN POSTS SHALL BE INSTALLED PER CITY OF ARLINGTON STANDARD DRAWINGS R14 AND R15. SIGNAGE SHALL CONFORM TO THE MANUAL ON UNIFORM TRAFFIC CONTROL DEVICES (MUTCD).
6. DEVELOPER SHALL PROVIDE THE CITY WITH ONE DUPLICATE SIGN FOR EACH STREET NAME. ENTIRE PLAT AND OFF-SITE CONSTRUCTION SHALL HAVE CENTERLINE PAVEMENT STRIPING APPLIED.
7. ALL PAVEMENT MARKINGS SHALL MEET WSDOT SPECIFICATIONS. STRIPING SHALL HAVE A BEADING RATE OF 7 LBS. PER GALLON OF PAINT AT THE TIME OF APPLICATION. TOP DRESSING ON THERMOPLASTICS SHALL BE APPLIED WHILE IN SEMI-LIQUID STATE.
8. PAVEMENT MARKINGS WITHIN STATE RIGHT OF WAY ARE TO BE INSTALLED TO FOLLOW 8-22 STANDARD SPECIFICATIONS.
9. THE STANDARD PLAN H-5C SHALL BE FOLLOWED FOR THE INSTALLATION OF PAVEMENT TRAFFIC ARROW SYMBOLS, CROSSWALK MARKINGS, STOP BAR MARKINGS AND BIKE LANE MARKERS PROPOSED FOR THE RIGHT OF WAY.
10. SR 531
    POSTED SPEED = 35 MPH
11. 176TH PLACE N.E. AND 75TH DRIVE N.E.
    POSTED SPEED = 20 MPH DESIGN
    SPEED = 25 MPH DESIGN VEHICLE TYPE IS P

SYMBOL LEGEND

1	D-3	STREET NAME SIGN (PER STND PLAN R-14 (AND MUTCD 2D-39)
2	R8-3	"NO PARKING" SIGN (PER MUTCD 2B-33)

STRIPING NOTES

STRIPING SHALL BE INSTALLED PER WSDOT STD. PLANS H-3a, H-5c AND THE MANUAL ON UNIFORM TRAFFIC CONTROL DEVICES (MUTCD), SECTIONS 3A AND 3B.

1. 5" WHITE EDGE STRIPE.
2. 4" DOUBLE YELLOW CENTER STRIPE (SEE WSDOT STD. PLAN H-3a, DETAIL B)

SAWCUT NOTE

WHERE EXISTING PAVEMENT IS TO BE WIDENED, CONTRACTOR SHALL SAWCUT PAVEMENT 1 FOOT INSIDE EX. FOGLINE. THE SAWCUT SHALL BE A NEAT-LINE CUT MADE BY EITHER SAWCUTTING OR JACKHAMMERING A CONTINUOUS LINE. CLEAN, HEAT AND TACK EDGES WITH SEALER SS-1 AND SEAL WITH HOT ASPHALT CEMENT.

LEGEND

- PROPERTY BOUNDARY
- EXISTING ASPHALT PAVEMENT
- PROPOSED ASPHALT PAVEMENT STATE ROUTE 531 IMPROVEMENTS SEE THIS SHEET FOR DETAIL
- PROPOSED CONCRETE
- PROPOSED GRAVEL

WSDOT APPROVAL

THE SR 531 IMPROVEMENTS SHOWN ON THIS PLAN ARE SUBJECT TO APPROVAL BY THE WASHINGTON STATE DEPARTMENT OF TRANSPORTATION. A SEPERATE PLAN HAS BEEN SUBMITTED TO WSDOT FOR REVIEW.

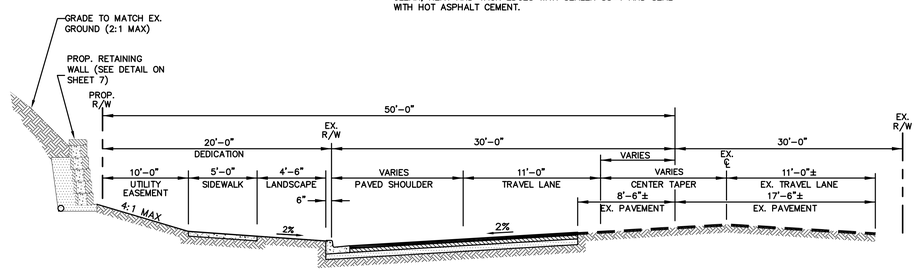

TYPICAL SECTION
172ND STREET (SR 531)

NOT TO SCALE

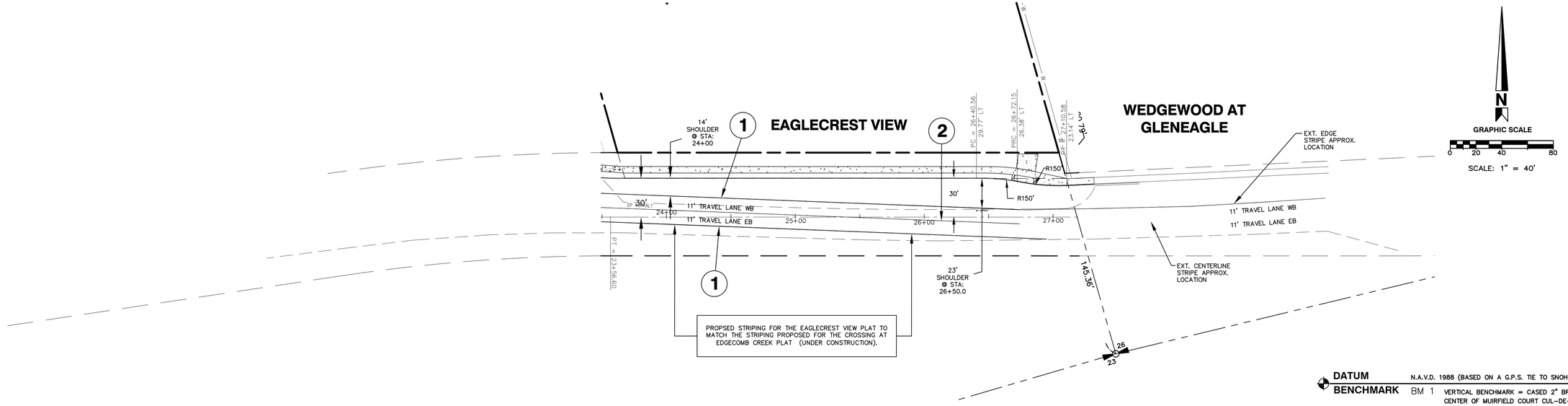

CHANNELIZATION PLAN - FRONTAGE IMPROVEMENTS (SEE PLAN APPROVED BY WSDOT)

SCALE: 1"=40'

NOTES: SEE TYPICAL ROAD SECTION (SR 531) THIS SHEET.
THIS PLAN IS FOR INFORMATIONAL PURPOSES ONLY.
SEE APPROVED W.S.D.O.T. NORTHWEST REGIONAL CHANNELIZATION PLAN FOR SR 531 AT MP 9.05 VICINITY

DATUM N.A.V.D. 1988 (BASED ON A G.P.S. TIE TO SNOHOMISH COUNTY CONTROL #1168)

BENCHMARK

BM 1 VERTICAL BENCHMARK = CASED 2" BRASS CAP MONUMENT AT THE CENTER OF MUIRFIELD COURT CUL-DE-SAC.
N.A.V.D. ELEVATION = 327.22'
(FOR CONVERSION TO N.G.V.D. 1929, SUBTRACT 3.73')

BM 2 FIRE HYDRANT
NORTH BOLT, LOWER FLANGE
ELEVATION=284.46' N.A.V.D. 88

CITY OF ARLINGTON FILE NO. C-04-056-LP

AS-BUILT DRAWINGS

HIGA-BURKHOLDER ASSOCIATES, LLC
LAND USE PLANNING / CIVIL ENGINEERING
1721 Hewitt Avenue ■ Suite 401
Everett, Washington 98201
(425) 252-2826 Telephone
(425) 252-9551 Fax
150 North Seventh Street
Springfield, Oregon 97477
Telephone (541) 988-1862
Fax (541) 988-1863

JAMES A. KREGER — STATE OF WASHINGTON — 15761 — REGISTERED PROFESSIONAL ENGINEER
EXPIRES 3/17/2008

CITY OF ARLINGTON
THIS SHEET HAS BEEN APPROVED PER CONDITIONS ON THE COVER SHEET

CONSTRUCTION	AS-BUILT ACKNOWLEDGEMENT
BY: _____ CITY ENGINEER	BY: _____ CITY ENGINEER
DATE: ____ /____ /____	DATE: ____ /____ /____

CALL 48 HOURS BEFORE YOU DIG 1-800-424-5555

DATE	REVISIONS	BY
07/05/05	REVISED PER CITY REVIEW	BOM
08/24/05	REVISED PER CITY REVIEW	BOM
02/15/06	REVISED PER CITY REVIEW	JAK
04/21/06	REVISED PER CITY REVIEW	JAK
11/30/06	REVISED PER AS-BUILT	JAK
12/28/06	REVISED PER AS-BUILT	JAK
1/25/07	EDITS PER A-B COMMENTS	JAK

PLAN DATE: 12/16/04
DESIGNED BY: MPG
DRAWN BY: RLM
PLAN CHECK BY: JAK

1ST SUBMITTAL: 01/05/05
2ND SUBMITTAL: 07/06/05
3RD SUBMITTAL: 02/15/06
4TH SUBMITTAL 04/21/06

CONSTRUCTION PLANS

EAGLECREST VIEW

CHANNELIZATION AND SIGNING PLAN
SR 531 - MP 9.05 VICINITY

JOB NO. 1771C

14/16

XREF: MORISC.DWG

SOUTHWEST 1/4 OF SECTION 23, TOWNSHIP 31 NORTH, RANGE 5 EAST, W.M.

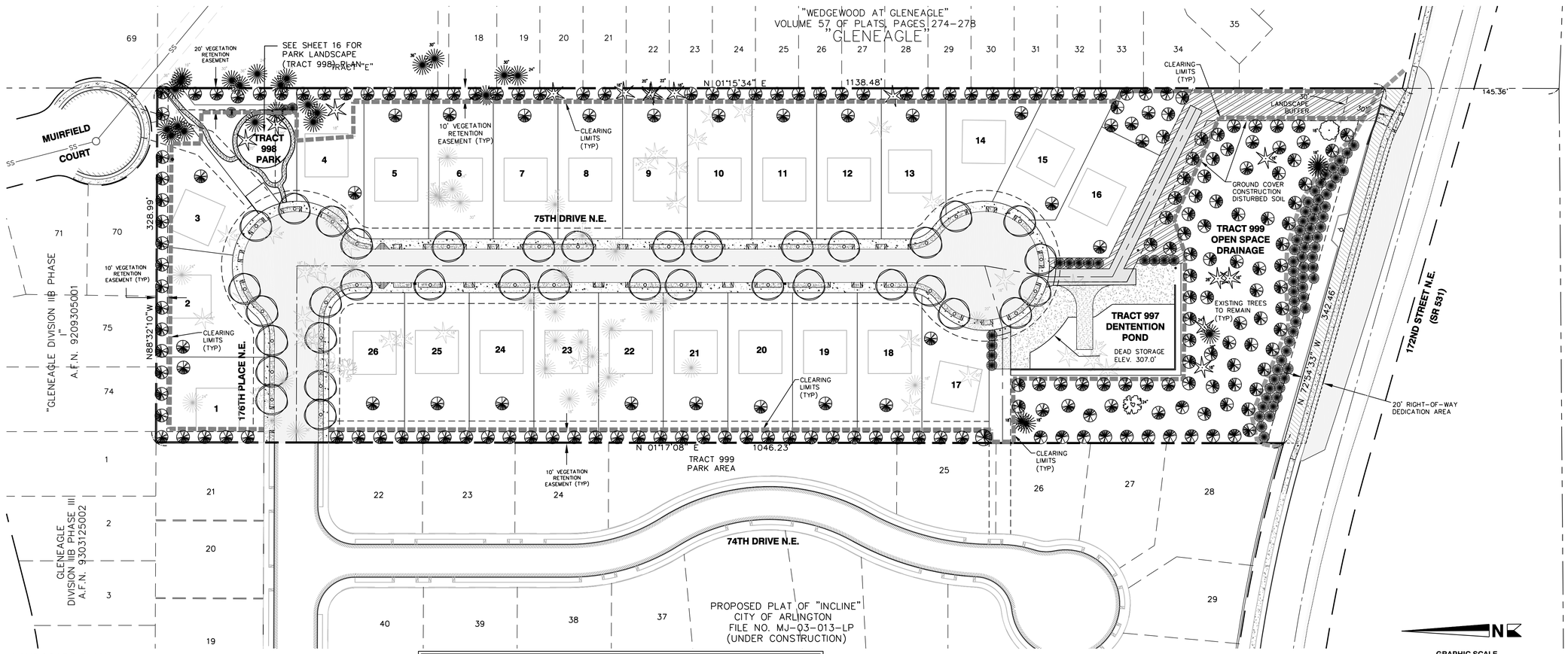

LANDSCAPE PLAN

SCALE: 1"= 50'

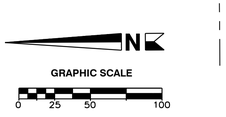

SCALE: 1" = 50'

TREE MITIGATION NOTES

THE FOLLOWING NOTE IS BASED ON AN APRIL 13, 2006 MEMORANDUM ISSUED BY THE CITY OF ARLINGTON DEVELOPEMENT SERVICE, PERMIT ASSISTANCE AND COMMUNITY RESOURCES (PACR) MANAGER:

FOLLOWING IS THE CITY OF ARLINGTON AND HIMALAYA HOMES FPA AGREEMENT TO A TREE MITIGATION PLAN FOR IMPACTS TO SIGNIFICANT TREES DURING DEVELOPEMENT OF EAGLECREST VIEW:

1. CLEAR THE ROAD AND UTILITY AREAS OF THE PLAT WITH AN ARBORIST PRESENT TO IDENTIFY SIGNIFICANT TREES AND PROVIDE THE PROPER NUMBER OF TREES, PRIMARILY DOUGLAS FIR, FOR MITIGATION. THESE TREES ARE TO BE PLANTED WITHIN THE 10' VEGETATIVE PERIMETER EASEMENT AREA.
2. CLEAR THE BALANCE OF THE SITE APPROVED FOR DEVELOPEMENT WITH AN ARBORIST PRESENT TO IDENTIFY SIGNIFICANT TREES AND PROVIDE THE PROPER NUMBER OF TREES FOR MITIGATION. THESE TREES ARE TO BE PLANTED WITHIN THE 10' VEGETATIVE PERIMETER EASEMENT AREA BUT MAY ALSO BE PLANTED IN APPROVED OPEN SPACE AREA IDENTIFIED WITHIN THE PLAT. (REFER TO THE CONSTRUCTION SEQUENCE DETAILED ON SHEET 1 OF THIS SET OF CONSTRUCTION DRAWINGS)

THE CITY OF ARLINGTONS PACR MANAGER WILL COORDINATE WITH THE DEVELOPER FOR THE FINAL PLACEMENT OF MITIGATION TREES.

THE CITY WILL RECOGNIZE TREES SAVED WITHIN THE DEVELOPABLE AREA AS MITIGATION TREES.

EVERY EFFORT IS TO BE MADE TO MINIMIZE THE IMPACT TO SIGNIFICANT TREES THAT ARE RECOGNIZED AS LOCATED IN AN AREA THAT MAY OR WILL BE DISTURBED EITHER BY NOT GRADING THAT AREA OR PROTECTING ROOT AREAS WITH WALLS OR OTHER MEANS FROM CUT OR FILL OPERATIONS.

POND SEED SCHEDULE

BOTANICAL NAME	COMMON NAME	SEED RATIO
CAREX AQUATILIS	WATER SEDGE	10%
CAREX CANESCENS	GREY SEDGE	3%
CAREX CUSICKII	CUSICK'S SEDGE	5%
CAREX OBNUPTA	SLOUGH SEDGE	10%
ELEOCHARIS PALUSTRIS	CREEPING SPIKERUSH	10%
GLYCERIA BOREALIS	NORTHERN MANNAGRASS	7%
GLYCERIA ELATA	TALL MANNAGRASS	8%
GLYCERIA GRANDIS	REED MANNAGRASS	7%
HORDEUM BRACHYANTHERUM	MEADOW BARLEY	10%
JUNCUS BALTICUS	BALTIC RUSH	10%
JUNCUS ENSIFOLIUS	DAGGERLEAF RUSH	3%
LUZULA PARVIFLORA	SMALL-FLOWERED WOODRUSH	7%
SCIRPUS AMERICANUS	AMERICAN BULRUSH	5%
SCIRPUS MICROCARPUS	SMALL-FLOWERED BULRUSH	5%

NOTES

1. SEED AND/OR SOD SIDES AND BOTTOM OF POND IN SPRING OR FALL.
2. PLANTING LIST PER NATIVE PLANT ALLIANCE MANUAL OF NATIVE PLANT COMMUNITIES FOR URBAN AREAS OF THE PACIFIC NORTHWEST, PLANTS OF THE PACIFIC NORTHWEST COAST BY POJAR & MACKINNON, AND LOCAL NURSERIES.
3. SPECIES SELECTED TO BE SUN TOLERANT AND PREFER WET SOILS. OTHER SPECIES MAY BE SUBSTITUTED IF THEY MEET SIMILAR ENVIRONMENTAL REQUIREMENTS.
4. PLANTING RATE = 32 LBS. PER ACRE (10 OZ. PER 1,000 SF)
5. USE DOUBLE RATE FOR HYDROSEEDING.
6. IMMEDIATELY SATURATE SEED AREA AND CONTINUE WATERING REGULARLY UNTIL ONE WEEK AFTER GERMINATION.

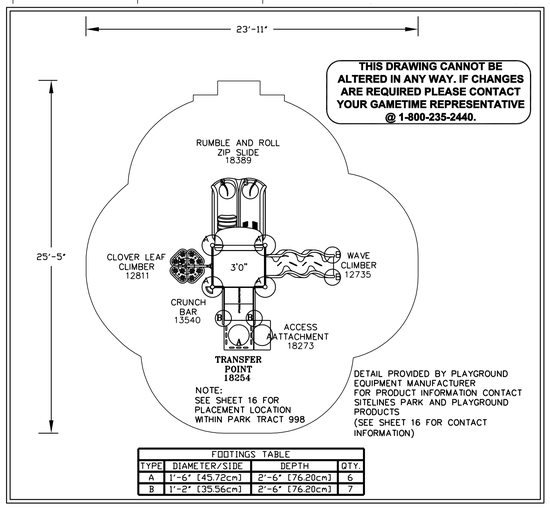

FOOTINGS TABLE			
TYPE	DIAMETER/SIDE	DEPTH	QTY.
A	1'-6" (45.72cm)	2'-6" (76.20cm)	6
B	1'-2" (35.56cm)	2'-6" (76.20cm)	7

PROPOSED PLAY GROUND EQUIPMENT

NOT TO SCALE

AS-BUILT DRAWINGS

LANDSCAPE SCHEDULE AND LEGEND

TREES	SCIENTIFIC/COMMON NAME	INSTALL SIZE	MATURE SIZE	SPACING	QUANTITY
	THUJA PLICATA (WESTERN RED CEDAR)	2" DIA, 8' HT.	100'	50' O.C.	106
	PSEUDOTSUGA MENZIESII (DOUGLAS FIR)	2" DIA, 8' HT.	100'	50' O.C.	107
	AMELANCHIER GRANDIFLORA (AUTUMN BRILLIANCE SERVICEBERRY)	2" DIA, 6' HT.	70'	30' O.C.	37
	PINUS CONTORTA (SHORE PINE)	1.5" DIA, 6' HT.	50'	20' O.C.	75

GROUND COVERS

BOTANICAL/COMMON NAME	
	FRAGARIA CHILOENSIS (WILD STRAWBERRY)
	POND SEED (SEE POND SEED SCHEDULE THIS SHEET)
	GRASS LAWN

LEGEND-EXISTING TREE

TREES TO BE REMOVED	TREES TO REMAIN
FIR	FIR
CEDAR	CEDAR
ALDER	ALDER
BIRCH	BIRCH
MAPLE	MAPLE

DATUM N.A.V.D. 1988 (BASED ON A G.P.S. TIE TO SNOHOMISH COUNTY CONTROL #1168)

BENCHMARK

BM 1 VERTICAL BENCHMARK = CASED 2" BRASS CAP MONUMENT AT THE CENTER OF MUIRFIELD COURT CUL-DE-SAC.
N.A.V.D. ELEVATION = 327.22'
(FOR CONVERSION TO N.G.V.D. 1929, SUBTRACT 3.73')

BM 2 FIRE HYDRANT
NORTH BOLT, LOWER FLANGE
ELEVATION=284.46' N.A.V.D. 88

CITY OF ARLINGTON FILE NO. C-04-056-LP

HIGA-BURKHOLDER ASSOCIATES, LLC
LAND USE PLANNING / CIVIL ENGINEERING
1721 Hewitt Avenue ■ Suite 401
Everett, Washington 98201
(425) 252-2826 Telephone
(425) 252-9551 Fax
150 North Seventh Street
Springfield, Oregon 97477
Telephone (541) 988-1862
Fax (541) 988-1863

CITY OF ARLINGTON

THIS SHEET HAS BEEN APPROVED PER CONDITIONS ON THE COVER SHEET

CONSTRUCTION	AS-BUILT ACKNOWLEDGEMENT
BY: _____ CITY ENGINEER	BY: _____ CITY ENGINEER
DATE: ____ /____ /____	DATE: ____ /____ /____

CALL 48 HOURS BEFORE YOU DIG 1-800-424-5555

DATE	REVISIONS	BY
07/05/05	REVISED PER CITY REVIEW	BOM
08/24/05	REVISED PER CITY REVIEW	BOM
02/15/06	REVISED PER CITY REVIEW	JAK
04/21/06	REVISED PER CITY REVIEW	JAK
11/30/06	REVISED PER AS-BUILT	JAK
12/28/06	REVISED PER AS-BUILT	JAK
1/25/07	EDITS PER A-B COMMENTS	JAK

PLAN DATE:	10/29/04
DESIGNED BY:	EAB, ABG
DRAWN BY:	ABG, RLM
PLAN CHECK BY:	JAK
1ST SUBMITTAL:	01/05/05
2ND SUBMITTAL:	07/06/05
3RD SUBMITTAL:	02/15/06
4TH SUBMITTAL:	04/21/06

CONSTRUCTION PLANS

EAGLECREST VIEW

LANDSCAPE PLAN

JOB NO. 1771C

15/16

XREF: MOPISC.DWG

PARK LANDSCAPE PLAN

SCALE 1" = 10'

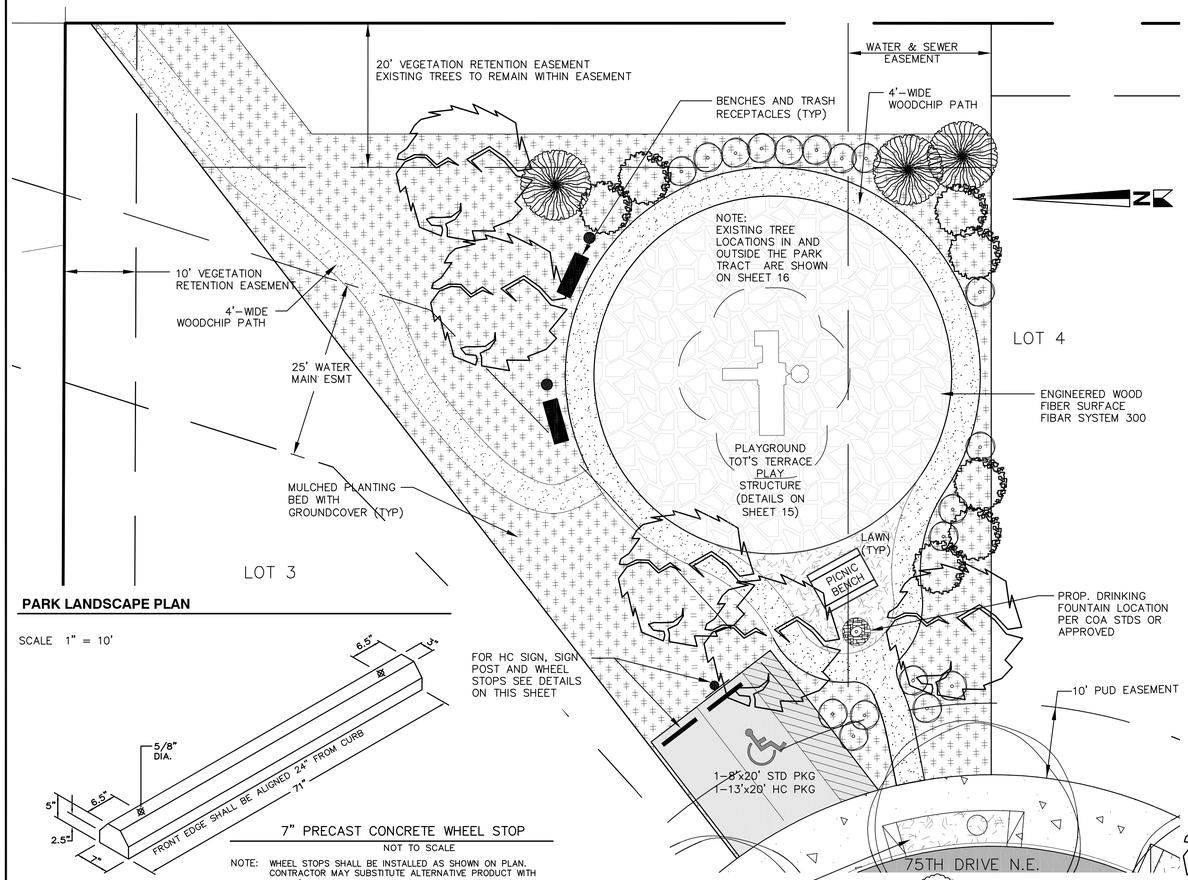

7" PRECAST CONCRETE WHEEL STOP

NOT TO SCALE

NOTE: WHEEL STOPS SHALL BE INSTALLED AS SHOWN ON PLAN. CONTRACTOR MAY SUBSTITUTE ALTERNATIVE PRODUCT WITH OWNER'S APPROVAL.

FOR LANSCAPING OF PROPERTY OTHER THAN PARK AREA TRACT 998, SEE SHEET 15

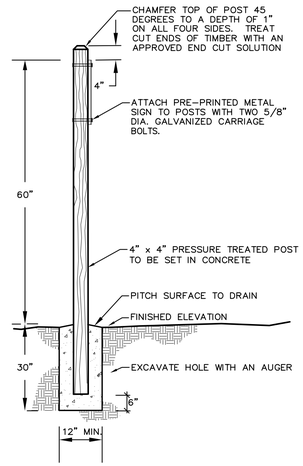

TYPICAL SIGNPOST INSTALLATION

NOT TO SCALE

BARRIER FREE SIGNS TO BE INSTALLED AT HEAD OF EACH ADA ACCESSIBLE PARKING STALL.

A.D.A. PARKING STALL SIGN DETAIL (TYP.)

NOT TO SCALE

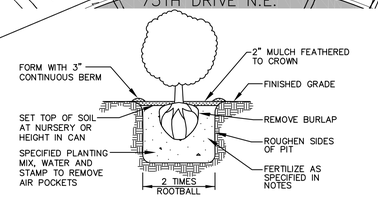

SHRUB PLANTING DETAIL

NOT TO SCALE

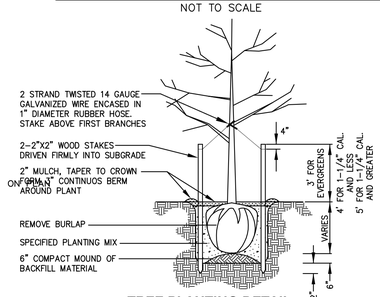

TREE PLANTING DETAIL

NOT TO SCALE

PLANTING AND CONSTRUCTION NOTES

1. IT IS PERMISSIBLE TO SUBSTITUTE BARE ROOT STOCK FOR THE INDICATED SPECIES. BARE ROOT STOCK WILL BE ACCEPTABLE IF APPROVED BY THE LANDSCAPE DESIGNER, INSTALLED IN THE APPROPRIATE SEASON AND INSTALLED AT A RATIO OF 3:2.
2. ALL TREES OVER 4' IN HEIGHT SHALL BE STAKED.
3. ROOT MASSES OF CONTAINERIZED STOCK SHOULD BE "SCORED" WITH A SHARP OBJECT TO INSURE THE PLANTS WILL NOT BECOME ROOT BOUND.
4. PLANTING PITS WILL RECEIVE AN APPLICATION OF 4-2-2 TRANSPLANT FERTILIZER.
5. AFTER PLANTING, IMMEDIATELY SATURATE ALL PLANTING PITS, TO ELIMINATE AIR POCKETS, AND FACILITATE SETTLING OF BACKFILL MATERIAL.
6. ALL PLANTS SHALL BE MARKED WITH BIODEGRADABLE SURVEY FLAGGING TO FACILITATE FUTURE MONITORING.
7. PLANTING DATES: OCTOBER 1 THROUGH APRIL 15.
8. SHRUBS, LIVING GROUND COVERS AND LAWNS CAN BE SELECTED FROM THE PLANT SCHEDULE LIST OF SHRUBS AND GROUND COVER, BUT MUST MEET THE FOLLOWING SPACING AND COVERAGE CRITERIA:
   A) SHRUBS AND GROUND COVERS CAN BE INTERCHANGED, BUT ONE OR THE OTHER MUST BE PLANTED TO ATTAIN A COVERAGE OF 90 PERCENT WITHIN THREE YEARS OF PLANTING EXCEPT WHERE SPECIFIC LOCATIONS ARE SHOWN ON PLANS.
   B) SHRUBS SHALL BE PLANTED AT AT DENSITY OF 5 SHRUBS PER 100 SQUARE FEET EXCEPT WHERE SPECIFIC LOCATIONS ARE SHOWN ON PLAN.
   C) GROUND COVERS SHALL BE PLANTED AS FOLLOWS: FOUR (4) INCH POTS, EIGHTEEN INCHES ON CENTER.
   D) LAWNS MAY BE USED FOR UP TO 75 PERCENT OF REQUIRED GROUND COVER EXCEPT IN PLANTING BEDS.
9. STREET TREES SHALL BE INSTALLED EVERY 30 FEET ALONG EITHER SIDE OF PROPOSED STREETS, EXCEPT WHERE DRIVEWAYS, UTILITIES OR OTHER IMPEDIMENTS ARE SITED. SPECIFIC LOCATIONS WILL BE ESTABLISHED BY THE LANDSCAPE CONTRACTOR IN THE FIELD.
10. DO NOT LOCATE STREET TREES WITHIN 30 FEET OF ANY ROAD INTERSECTION.
11. INSTALL STREET TREES WITHIN DESIGNATED PLANTING STRIP AS SHOWN ON THIS SHEET.
12. STREET TREES TO BE INSTALLED AFTER SITE WORK IS DONE, INCLUDING ROADS, UTILITIES, DRIVEWAYS, ETC.
13. ROOT BARRIERS SHALL BE INSTALLED AT BOTH EDGES OF ALL PLANTER STRIPS ALONG PUBLIC RIGHTS-OF-WAY. BARRIERS SHALL BE CENTURY ROOT BARRIERS, 18 INCH WIDE ROLLS, OR EQUAL.
14. ALL TREES AND SHRUBS INSTALLED IN LANDSCAPE AREA SHALL BE PLANTED IN A PLANTING BED WITHOUT TURF. THE BEDS SHALL BE AT LEAST 4 FEET IN DIAMETER OR THE SIZE OF THE DRIPLINE, WHICHEVER IS GREATER. ALL PLANTING BEDS SHALL HAVE 3 INCHES OF MULCH.
15. HAND WATERING OF PLANTS SHALL BE DONE AS NEEDED FOR PLANT SURVIVAL, UNLESS OTHERWISE NOTED ON PLANTING PLAN.
16. ALL NON-NATIVE / UNDESIRABLE PLANTS (BLACKBERRY, SCOTCH BROOM, REED CANARY GRASS, ETC.) THAT MAY INHIBIT THE GROWTH OF NEW PLANTINGS, SHALL BE REMOVED FROM THE AREA.
17. THE BARK MULCH AREAS SHALL REMAIN FREE OF WEEDS AND COMPETING PLANTS TO ENSURE OPTIMUM GROWTH.
18. LOCATION OF STREET LIGHTS ARE CONCEPTUAL ONLY. SNOHOMISH COUNTY P.U.D. NO. 1 WILL LOCATE IN FIELD.
19. ALL PLANTING BEDS SHALL BE BARK MULCHED TO A 2" DEPTH.
20. LANDSCAPE CONTRACTOR SHALL WARRANTY PLANT SURVEY FOR ONE YEAR.

PARK AREA FURNISHINGS

SYMBOL	NAME	QTY	MANUFACTURER	ITEM NO.	NOTES	MANUFACTURER'S REPRESENTATIVE
	CONTOUR BENCH	2	PILOT ROCK PARK EQUIPMENT	#SWRB/B-4PW OR EQUIVALENT	BROWN RECYCLED PLASTIC	SITE LINES PARK AND PLAYGROUND PRODUCTS 626 128TH ST. SW EVERETT, WA 98204 (425) 355-5655
	TRASH RECEPTACLE HOLDER AND RECEPTACLE HOLDER STATIONARY MOUNT	2	PILOT ROCK PARK EQUIPMENT	#TRH/B-32PW24 AND M2/B OR EQUIVALENT	BROWN RECYCLED PLASTIC	NOTE: ANCHOR PARK ELEMENTS (BENCHES AND LITTER RECEPTACLES) IN CONCRETE PER MANUFACTURER'S SPECIFICATIONS.
	PICNIC TABLE	1	PILOT ROCK PARK EQUIPMENT	#XT/G-6PU OR EQUIVALENT	BROWN RECYCLED PLASTIC	SITE LINES PARK AND PLAYGROUND PRODUCTS 626 128TH ST. SW EVERETT, WA 98204 (425) 355-5655
	TOT'S TERRACE PLAY STRUCTURE	1	GAMETIME	11775 PRIMETIME	INCLUDES CLIMBING STRUCTURE, SLIDES, AND RAISED PLATFORM	SITE LINES PARK AND PLAYGROUND PRODUCTS 626 128TH ST. SW EVERETT, WA 98204 (425) 355-5655
	PLAYGROUND SURFACE MATERIAL	1	FIBAR SYSTEM	FIBAR SYSTEM 300	INSTALL TO MANUFACTURER'S SPECIFICATIONS	SITE LINES PARK AND PLAYGROUND PRODUCTS 626 128TH ST. SW EVERETT, WA 98204 (425) 355-5655

PLANT SCHEDULE AND LEGEND

TREES	SCIENTIFIC/COMMON NAME	INSTALL SIZE	MATURE SIZE	SPACING	QUANTITY
	ACER RUBRUM (AUTUMN FLAME)	2" DIA, 6' HT.	70'	AS SHOWN	5
	PINUS CONTORTA (SHORE PINE)	2" DIA, 6' HT.	20'	20' O.C.	3
	MAGNOLIA STELLATA (STAR MAGNOLIA)	5 GAL 6' HT	20'	15' O.C.	7
	AMELANCHIER GRANDIFLORA (AUTUMN BRILLIANCE SERVICEBERRY)	2" DIA, 6' HT.	70'	30' O.C.	SEE SHEET 12

SHRUBS	SCIENTIFIC/COMMON NAME	PLANTING NOTE	QUANTITY
	ROSA RUGOSA/RUGOSA ROSE VIBURNUM X BURKWOODII EUONYMUS ALATA 'COMPACTUS'/ WINGED EUONYMOUS LIGUSTRUM JAPONICUM/JAPANESE PRIVET BERBERIS AQUIFULIUM/OREGON GRAPE SYMPHORCARPOS ALBUS/SNOWBERRY	ALL SHRUBS SHALL BE TWO GALLON SIZE AND AT LEAST 24 INCHES AT PLANTING. SPACING OF SHRUBS IS 5 SHRUBS PER 100 SQUARE FEET. TO BE PLANTED AT A MIXTURE OF 1/3 OF EACH SPECIES LISTED.	18

GROUND COVERS	SCIENTIFIC/COMMON NAME	PLANTING NOTE	INSTALL SIZE	SPACING
	ARCTOSTAPHYLOS UVA-URSI (KINNIKINNICK) PARTHENOCISSUS QUINQUEFOLIA (VIRGINIA CREEPER) VINCA MINOR (PERIWINKLE)	GROUNDCOVERS SHALL BE PLANTED BETWEEN ALL TREES AND SHRUBS TO COVER 90% OF GROUND IN 3 YEARS, PER ARLINGTON CODE REQUIREMENTS FOR TYPE II LANDSCAPING.	4" PTS	18" OC
	GRASS LAWN	--	--	--

PARK AREA REQUIREMENTS

PARK AREA REQUIRED (200 SQ FT PER LOT)	5,400 SQ FT
PARK AREA PROPOSED	9,878 SQ FT (0.23 ACRES)

HATCH LEGEND

- WOOD-FIBER SURFACE
- CONCRETE SIDEWALK
- WOOD CHIP WALKWAY
- ASPHALT PAVED AREA

AS-BUILT DRAWINGS

DATUM

BENCHMARK N.A.V.D. 1988 (BASED ON A G.P.S. TIE TO SNOHOMISH COUNTY CONTROL #1168)

BM 1 VERTICAL BENCHMARK = CASED 2" BRASS CAP MONUMENT AT THE CENTER OF MUIRFIELD COURT CUL-DE-SAC.
N.A.V.D. ELEVATION = 327.22'
(FOR CONVERSION TO N.G.V.D. 1929, SUBTRACT 3.73')

BM 2 FIRE HYDRANT
NORTH BOLT, LOWER FLANGE
ELEVATION=284.46' N.A.V.D. 88

CITY OF ARLINGTON FILE NO. C-04-056-LP

HIGA-BURKHOLDER ASSOCIATES, LLC
LAND USE PLANNING / CIVIL ENGINEERING
1721 Hewitt Avenue ■ Suite 401
Everett, Washington 98201
(425) 252-2826 Telephone
(425) 252-9551 Fax
150 North Seventh Street
Springfield, Oregon 97477
Telephone (541) 988-1862
Fax (541) 988-1863

CITY OF ARLINGTON

THIS SHEET HAS BEEN APPROVED PER CONDITIONS ON THE COVER SHEET

CONSTRUCTION	AS-BUILT ACKNOWLEDGEMENT
BY: _____ CITY ENGINEER	BY: _____ CITY ENGINEER
DATE: ____ /____ /____	DATE: ____ /____ /____

CALL 48 HOURS BEFORE YOU DIG 1-800-424-5555

DATE	REVISIONS	BY
07/05/05	REVISED PER CITY REVIEW	BOM
08/24/05	REVISED PER CITY REVIEW	BOM
02/15/06	REVISED PER CITY REVIEW	JAK
04/21/06	REVISED PER CITY REVIEW	JAK
11/30/06	REVISED PER AS-BUILT	JAK
12/28/06	REVISED PER AS-BUILT	JAK
1/25/07	EDITS PER A-B COMMENTS	JAK

PLAN DATE:	10/29/04
DESIGNED BY:	EAB, ABG
DRAWN BY:	ABG, RLM
PLAN CHECK BY:	JAK
1ST SUBMITTAL:	01/05/05
2ND SUBMITTAL:	07/06/05
3RD SUBMITTAL:	02/15/06
4TH SUBMITTAL:	04/21/06

CONSTRUCTION PLANS

EAGLECREST VIEW

TRACT 998
LANDSCAPE PLAN, DETAILS AND NOTES

JOB NO. 1771C

16/16

XREF: MORNSC.DWG