LAYOUT & DUCT:

REFER TO SHEET 15

SCHEMATIC:

REFER TO SHEET S2

B4 SCHEMATIC:

REFER TO SHEET S1B4

VAULT INSPECTION FORMS:

REFER TO SHEET 16

TRENCH SECTIONS:

REFER TO SHEET 17

GENERAL NOTES:

1. ALL OVHD WORK TO BE DONE ON ORDER #100016759, OPERATION #0030. THIS WORK TO INCLUDE INSTALLING POLES, GANG-OP GET-A-WAY SWITCHES AND RISER POLE ASSEMBLYS.
2. OVHD FIBER INSTALLATION TO BE DONE ON ORDER# 100016759, OPERATION 0040, TOTAL OVHD FIBER FOOTAGE = 900', TOTAL LENGTH OF FIBER (OVHD + UGND) =1800'
3. WATER MAIN IS APPROXIMATELY 40" TO TOP OF PIPE. DUCT RUNS A, B, C, D & E TO GO OVER WATERLINE. DUCT RUNS F, G, H, & I TO GO UNDER WATER LINE. 12" SEPARATION REQUIRED BETWEEN WATER AND POWER CONDUITS. BETWEEN 36" & 18" COVER REQUIRES CAUTION TAPE. LESS THAN 18" OF COVER REQUIRES 3" THICK CONCRETE CAP.

CABLE NOTES:

FROM EAR SWITCHGEAR 12-986 TO VAULT A-20446, REMOVE PORTION OF (3)1000 KCMIL & (1)500 KCMIL PRIMARY UGND CABLE#'S 36153, 36154 & 36155.

FROM EAR SWITCHGEAR 12-987 TO VAULT A-20445, REMOVE PORTION OF (3)1000 KCMIL & (1)500 KCMIL PRIMARY UGND CABLE#'S 36156, 36157 & 36158.

FROM EAR SWITCHGEAR 12-988 TO POLE XE-5, REMOVE (3)1000 KCMIL & (1)500 KCMIL PRIMARY UGND CABLE#'S 36159, 36160 & 36161.

FROM EAR SWITCHGEAR 12-989 TO POLE XE-5, REMOVE (3)1000 KCMIL & (1)500 KCMIL PRIMARY UGND CABLE#'S 36162, 36163 & 36164.

FROM EAR SWITCHGEAR 12-2617 TO POLE XL-1, REMOVE (3)1000 KCMIL & (1)500 KCMIL PRIMARY UGND CABLE#'S 36135, 36136 & 36137.

FROM EAR SWITCHGEAR 12-2618 TO POLE XL-1, REMOVE (3)1000 KCMIL & (1)500 KCMIL PRIMARY UGND CABLE#'S 36138, 36139 & 36140.

FROM EAR SWITCHGEAR 12-2619 TO VAULT A-20444, REMOVE PORTION OF (3)1000 KCMIL & (1)500 KCMIL PRIMARY UGND CABLE#'S 36141, 36142 & 36143.

FROM EAR SWITCHGEAR 12-2620 TO VAULT A-21357, REMOVE (3)1000 KCMIL & (1)500 KCMIL PRIMARY UGND CABLE#'S 36150, 36151 & 36152.

FROM VAULT A-21357 TO POLE EA-L 0/1, REMOVE (3)1000 KCMIL & (1)500 KCMIL PRIMARY UGND CABLE#'S 36150, 36151 & 36152.

CONSTRUCTION NOTES:

BY PUD

AT POLE <1

-INSTALL (2) 6" PRIMARY RISERS W/ 90° FIBERGLASS BENDS ON WEST SIDE OF POLE (F0216).
-TERMINATE CABLES ON POTHEADS
-POLE INSTALLED & FRAMED ON ORDER #100016759
-INSTALL CABLE TAGS PER SCHEMATIC

AT POLE 276548

-INSTALL (1) 6" PRIMARY RISER W/ 90° FIBERGLASS BEND ON SOUTH SIDE OF POLE (F0216).
-TERMINATE CABLES ON POTHEADS
-POLE FRAMED ON ORDER #100016759
-INSTALL CABLE TAGS PER SCHEMATIC

AT POLE XL-1

-INSTALL (2) 6" PRIMARY RISERS W/ 90° FIBERGLASS BENDS ON WEST SIDE OF POLE (F0216).
-TERMINATE CABLES ON POTHEADS
-INSTALL CABLE TAGS PER SCHEMATIC
-INSTALL SWITCH BOARD# 12-70041 ON NORTH SIDE CKT PER SCHEMATIC.
-INSTALL SWITCH BOARD# 12-70042 ON SOUTH SIDE CKT PER SCHEMATIC.

AT VAULT A-20444

-INSTALL (3) 4-WAY 600A 15KV DEADBREAK J-BOXES (T1604)
-INSTALL (6) 600A DEADBREAK ELBOWS (T1107)
-CONNECT 500 KCMIL AL NEUTRAL & 1100 KCMIL CONCENTRIC NEUTRAL WIRES TO 4/0 CU VAULT GROUND
-INSTALL CABLE TAGS PER SCHEMATIC

AT VAULT A-20445

-INSTALL (3) 4-WAY 600A 15KV DEADBREAK J-BOXES (T1604)
-INSTALL (6) 600A DEADBREAK ELBOWS (T1107)
-CONNECT 500 KCMIL AL NEUTRAL & 1100 KCMIL CONCENTRIC NEUTRAL WIRES TO 4/0 CU VAULT GROUND
-INSTALL CABLE TAGS PER SCHEMATIC

AT VAULT A-20446

-INSTALL (3) 4-WAY 600A 15KV DEADBREAK J-BOXES (T1604)
-INSTALL (6) 600A DEADBREAK ELBOWS (T1107)
-CONNECT 500 KCMIL AL NEUTRAL & 1100 KCMIL CONCENTRIC NEUTRAL WIRES TO 4/0 CU VAULT GROUND
-INSTALL CABLE TAGS PER SCHEMATIC

AT VAULT A-50562

-INSTALL 6'8" x 12'8" x 8' VAULT & LID (V0501).
-INSTALL PME-11D DEAD-FRONT PADMOUNT SWITCHGEAR (12U511DF)
-INSTALL (9) 1100 KCMIL 600A DEADBREAK ELBOWS (T1107)
-INSTALL (3) NEW 1100 KCMIL PRIMARY CABLES FROM A-50563
-INSTALL CABLE TAGS PER SCHEMATIC

AT VAULT A-50563

-INSTALL 6'8" x 12'8" x 8' VAULT & LID (V0501).
-INSTALL PME-11D DEAD-FRONT PADMOUNT SWITCHGEAR (12U511DF)
-INSTALL (9) 1100 KCMIL 600A DEADBREAK ELBOWS (T1107)
-INSTALL (3) 200A 15KV DEADEND CAPS (T1701)
-INSTALL CABLE TAGS PER SCHEMATIC

AT VAULT F-50564

-INSTALL 4'8" x 4'8" x 3'6" VAULT (J0501).
-LABEL VAULT F-50564.

CABLE

CABLE TAGS BY PUD

CABLE PULLS BY PUD CONTRACTOR - FOR INFORMATION REFER TO UGND 7317-10

FIBER OPTIC CABLE

BY PUD

FROM POLE <1 TO F-50564

480' OF (1) 36STR ADSS IN 6" PVC (380' + 100' COIL IN VAULT F-50564)

FROM F-50564 TO EAGLE CREEK SWITCHGEAR

280' OF (1) 36STR ADSS IN 3" PVC

VAULTS

BY PUD

A-50562 & A-50563

BOTTOM: 6'8" x 12'8" x 1'6"
MIDDLE: 6'8" x 12'8" x 5'0"
COVER: 6'8" x 12'8" x 1'6" W/(1) 3' x 3' DIAMOND PLATE LID & (1) 64" x 66" ACCESS HOLE

F-50564

4'8" x 4'8" x 3'6" CONCRETE VAULT AND
4'8" x 4'8" x 6" COVER W/A 3' x 3' DIAMOND PLATE LID

SWITCH CABINETS 12,470-480/220V

BY PUD

A-50562 PME-11D

UTC _____
SER _____
MAKE _____

A-50563 PME-11D

UTC _____
SER _____
MAKE _____

SNOHOMISH COUNTY PUD PUBLIC UTILITY DISTRICT NO 1

LOCATION **8630 212TH STREET NE, ARLINGTON 98227** AREA ARLINGTON
POLE NO NW1/4S 12 T 31 R 5 DATE 6/5/17 ORDER **100002622**
REASON FOR WORK PROVIDE 3ø PRIMARY UNDERGROUND DISTRIBUTION SYSTEM FOR **EAGLE CREEK SUBSTATION 12kV GET-A-WAYS** ENGINEER B. FREEMAN OPERATION 0060
DRAFTER J. WETZEL UGND NO 7317-14
APPROVED & DATE MBS 6/8/17 SCALE NOTED
DATE WORK COMPLETED _____ FOREMAN _____
SUBSTATION EAGLE CREEK
CIRCUIT NO 12-986 PHASE 1,2,3
CIRCUIT NO 12-987 PHASE 1,2,3
CIRCUIT NO 12-988 PHASE 1,2,3
CIRCUIT NO 12-989 PHASE 1,2,3
CIRCUIT NO 12-2617 PHASE 1,2,3
CIRCUIT NO 12-2618 PHASE 1,2,3
CIRCUIT NO 12-2619 PHASE 1,2,3
CIRCUIT NO 12-2620 PHASE 1,2,3

INSPECTOR _____
DATE _____

FEES REQ'D ☐ YES ■ NO
PRIMARY OVERHEAD
☐ RESIDENTIAL
☐ COMMERCIAL
LEU# _____
_____ @ $_____ = $_____
PRIMARY UNDERGROUND
☐ RESIDENTIAL
☐ COMMERCIAL
BASIC FEE $_____
LEU# _____
_____ @ $_____/' = $_____
SECONDARY UNDERGROUND
BASIC FEE $_____
_____ @ $_____/' = $_____
WORK IN RIGHT OF WAY
☐ PRIMARY
☐ SECONDARY
_____ FT @ $_____ = $_____
MISCELLANEOUS FEES
VAULT $_____
PERMIT $_____
$_____
$_____
$_____
TOTAL DUE $_____
DATE PAID _____
RECEIPT# _____

NESC VIOLATIONS
■ NO ☐ YES (SEE NOTES)
PERMITS (DATE GRANTED)
☐ TREE TRIM _____
☐ STATE _____
☐ COUNTY _____
■ ARLINGTON 5/31/17
☐ _____
EASEMENTS ■ REQUIRED
E#_____ ☐ NOT REQUIRED
REQUEST NO. _____
DATE APPROVED _____
FOREIGN CONTACTS
☐ JPN# _____
☐ JOINT TRENCH FRONTIER & CATV
☐ JOINT BORE FRONTIER & CATV
☐ _____
POLE STENCILING
FROM _____ TO _____
TAKE OFF POLE _____
PRE-CONSTR REQUIREMENTS
☐ TREE TRIM ☐ PUD LOCATOR
☐ BACKHOE ☐ _____
■ ONE CALL DATE _____
_____
STREET LIGHTING
☐ YES ■ NO

	M&R	AS-BUILT
	GIS	
	GIS QC	M&R
	GIS Ph	JOINT USE

LOCATION MAP PAGE 317, E3

REVISIONS

APPV	NO.	DATE	DESCRIPTION

AS-BUILT

APPV	NO.	DATE	DESCRIPTION

ENGINEER BOONE FREEMAN CUSTOMER _____
PHONE (425) 783-5405 PHONE _____
CELLULAR (425) 238-0775 PAGER/CELLULAR _____

PRINTED AH JUN 09 '17

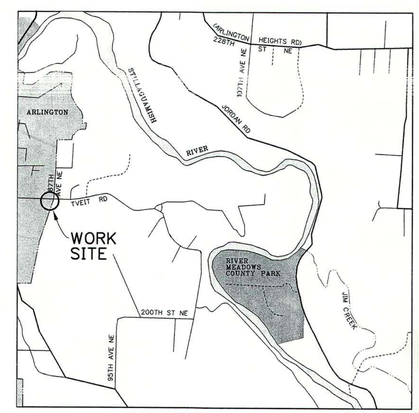

N NORTH

VICINITY MAP

TAGS

VAULT: A-50562, A-50563 & F-50564

CABLE: 101956 THRU 101985 &
101989 THRU 101991

UGND 7317-14

FILE: W:\AD\7000\7317-14.dgn
DATE: 09-Jun-17 08:46

LAYOUT LEGEND:

- PAD MOUNTED TRANSFORMER
- SUBMERSIBLE TRANSFORMER
- ABOVE GROUND J-BOX
- SUBMERSIBLE J-BOX
- SECONDARY VAULT
- PULLING VAULT
- SWITCH CABINET
- SMALL SECONDARY PEDESTAL
- LARGE SECONDARY PEDESTAL
- STREET LIGHT PEDESTAL
- PRIMARY UNDERGROUND CABLE
- PRIMARY DUCT INSTALLED BY PUD AND WIRE PULLED BY PUD CONTRACTOR
- FIBER
- *350 SECONDARY UNDERGROUND CABLE
- 4/0 SECONDARY UNDERGROUND CABLE
- 1/0 SECONDARY UNDERGROUND CABLE
- STREET LIGHT CABLE
- SERVICE CONDUIT
- POLE AND OVERHEAD LINE
- PROPERTY LINE
- RIGHT-OF-WAY LINE
- EXISTING UNDERGROUND CABLE
- EXISTING DUCT
- FUTURE DUCT
- SANITARY SEWER/MANHOLE
- STORM DRAIN/CATCH BASIN
- WATER MAIN/METER
- FIRE HYDRANT
- STREET LIGHT
- UNDERGROUND LOCATOR MARKER

DUCT

BY PUD

- (A) **900'** OF (1) **6"** PVC
- (B) **800'** OF (1) **6"** PVC
- (C) **830'** OF (2) **6"** PVC ((1) FUTURE)
- (D) **310'** OF (1) **6"** PVC
- (E) **310'** OF (1) **6"** PVC
- (F) **65'** OF (2) **3"** PVC (FUTURE FIBER)
- (G) **130'** OF (2) **6"** PVC (FUTURE)
- (H) **400'** OF (2) **6"** PVC ((1) FUTURE)
- (I) **400'** OF (1) **6"** PVC
- (J) **330'** OF (2) **3"** PVC (FUTURE FIBER)
- (K) **280'** OF (1) **2"** PVC (FUTURE)
- (L) **150'** OF (2) **6"** PVC ((1) FUTURE)
- (M) **140'** OF (2) **6"** PVC ((1) FUTURE)
- (N) **80'** OF (2) **6"** PVC ((1) FUTURE)
- (O) **7'** OF (2) **6"** PVC ((1) FUTURE)
- (P) **20'** OF (1) **4"**PVC

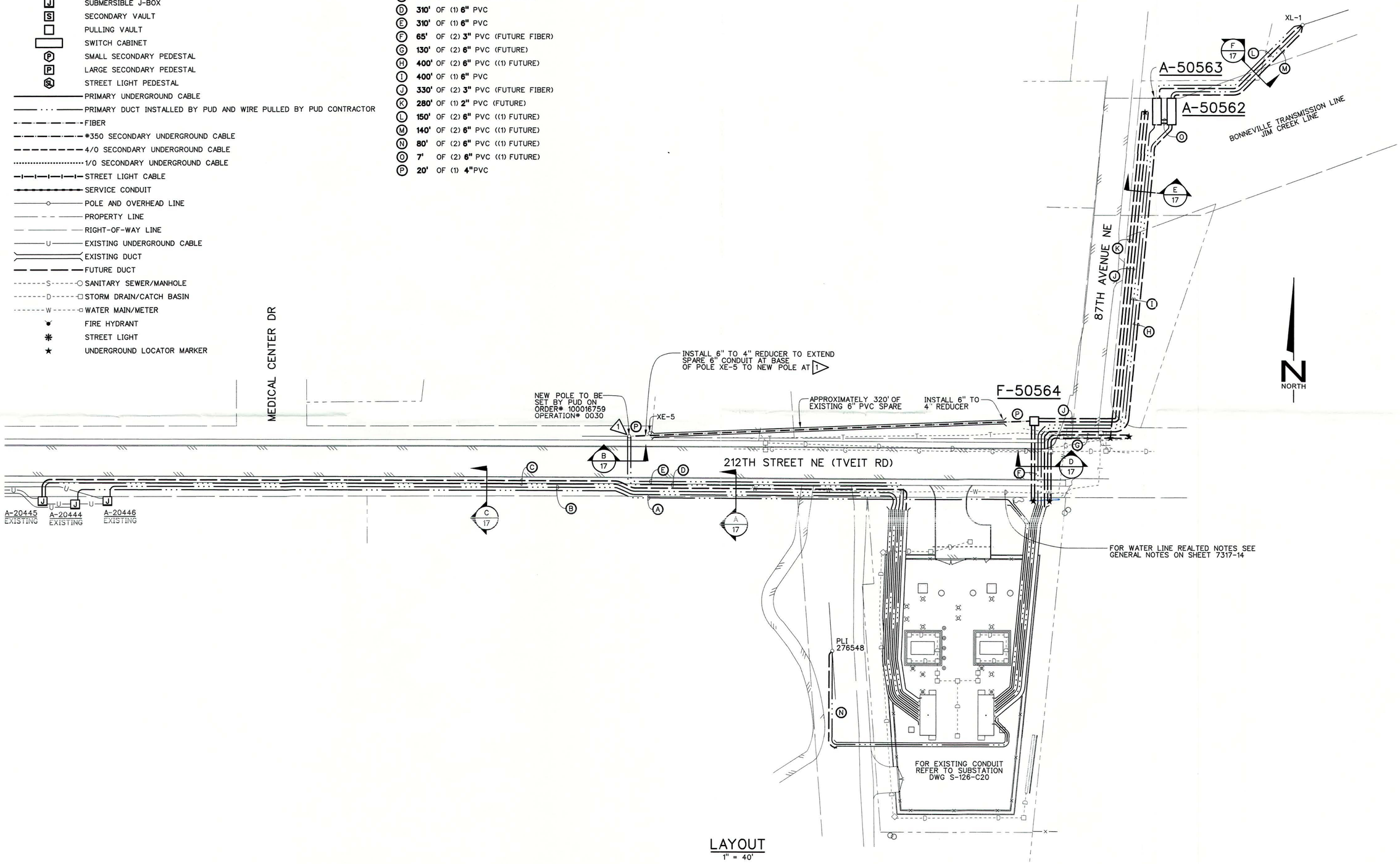

LAYOUT

1" = 40'

No.	DATE	BY	DESCRIPTION	ENGR	CHKR	APVD

REVISIONS

SNOHOMISH COUNTY PUD PUBLIC UTILITY DISTRICT NO 1

ORDER	100002622
OPERATION	0060
SCALE	NOTED
DFTR	J. WETZEL
CHKR	ES
ENGR	B. FREEMAN
APVD	MBS
DATE	6/5/17

EAGLE CREEK SUBSTATION GET-A-WAYS

LAYOUT & DUCT

REV	DRAWING
0	7317-15

FILE: W:\AD\7000\7317-15.dgn
DATE: 06-Jun-17 08:4.5

LEGEND:

- CLOSED SWITCH
- CLOSED FUSE
- OPEN SWITCH OR FUSE
- 5432 FI — CABLE TAG WITH FAULT INDICATOR
- (VAC) — VACANT POSITION
- North — NORTH DIRECTION

FOREMAN INSTRUCTIONS:

COMPLETE ALL INFORMATION ACCURATELY AND LEGIBLY (NAME, DATE, CABLE TAGS, PHASING, ETC.).

ALL PHASING INFORMATION MUST BE COMPLETED WHEN PHASING CAN BE VERIFIED.

MARK ALL VACANT POSITIONS AS (VAC).

INDICATE NORTH DIRECTION ON ALL FORMS.

* IMPORTANT *
NOTE ALL DISCREPANCIES FOUND IN VAULTS.

Inspector/Foreman _____ **Date** _____

SWITCHING VAULT
VAULT A- 20444

Above Ground ☐ Submersible ☐

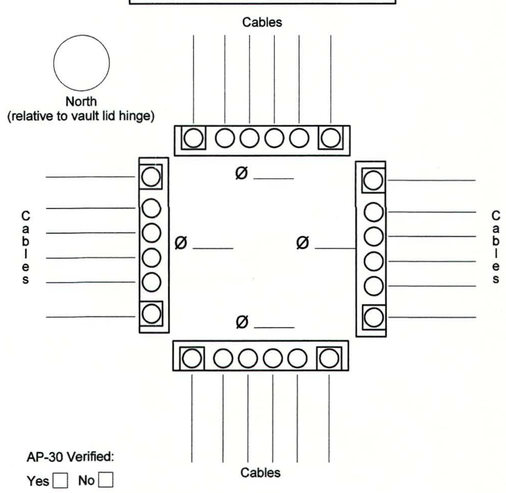

AP-30 Verified:
Yes ☐ No ☐

Job/Name EAGLE CREEK SUBSTATION GET-A-WAYS
UG# 7317 Layout Sheet # 15 Schematic Sheet # S2

Form 2023 Rev 12/14

Inspector/Foreman _____ **Date** _____

SWITCHING VAULT
VAULT A- 20445

Above Ground ☐ Submersible ☐

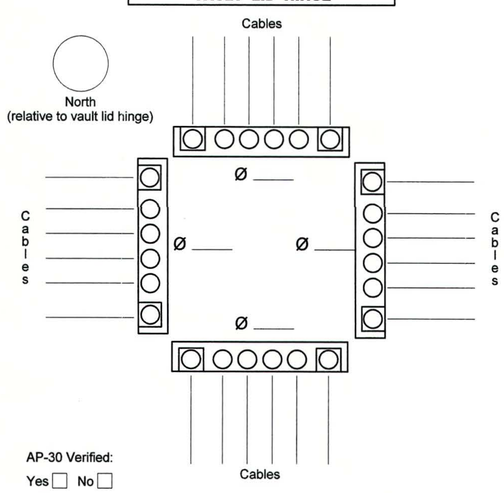

AP-30 Verified:
Yes ☐ No ☐

Job/Name EAGLE CREST SUBSTATION GET-A-WAYS
UG# 7317 Layout Sheet # 15 Schematic Sheet # S2

Form 2023 Rev 12/14

Inspector/Foreman _____ **Date** _____

SWITCHING VAULT
VAULT A- 20446

Above Ground ☐ Submersible ☐

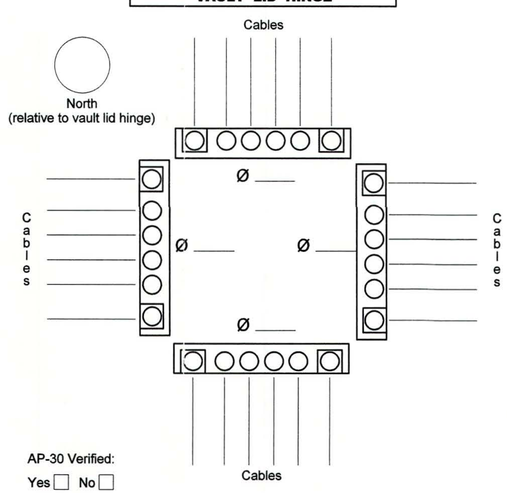

AP-30 Verified:
Yes ☐ No ☐

Job/Name EAGLE CREEK SUBSTATION GET-A-WAYS
UG# 7317 Layout Sheet # 15 Schematic Sheet # S2

Form 2023 Rev 12/14

Inspector/Foreman _____ **Date** _____

SWITCHING CABINET
VAULT A- 50562

District No. _____ Serial No. _____ Manufacturer _____ Type or Model _____

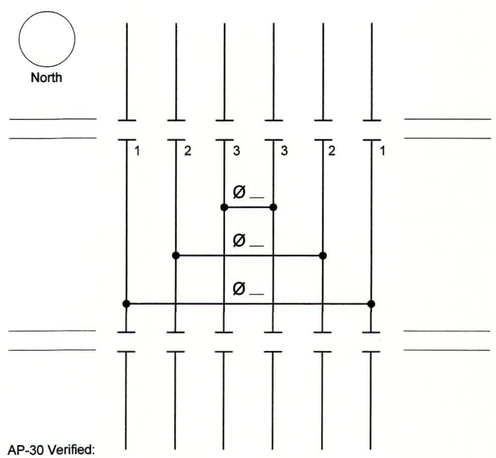

AP-30 Verified:
Yes ☐ No ☐

Job/Name EAGLE CREEK SUBSTATION GET-A-WAYS
UG# 7317 Layout Sheet # 15 Schematic Sheet # S2

Form 2024 Rev 12/14

Inspector/Foreman _____ **Date** _____

SWITCHING CABINET
VAULT A- 50563

District No. _____ Serial No. _____ Manufacturer _____ Type or Model _____

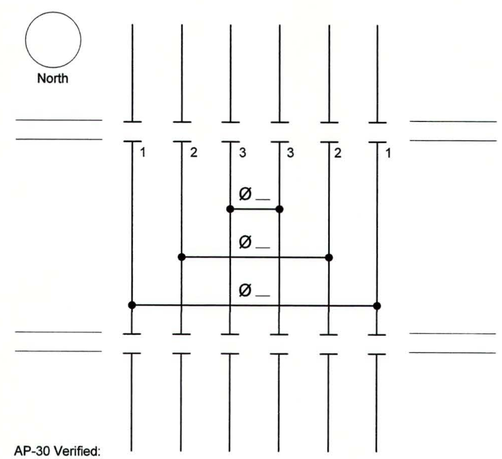

AP-30 Verified:
Yes ☐ No ☐

Job/Name EAGLE CREEK SUBSTATION GET-A-WAYS
UG# 7317 Layout Sheet # 15 Schematic Sheet # S2

Form 2024 Rev 12/14

No.	DATE	BY	DESCRIPTION	ENGR	CHKR	APVD

REVISIONS

SNOHOMISH COUNTY PUD PUBLIC UTILITY DISTRICT NO 1

ORDER	100002622
OPERATION	0060
SCALE	NONE
DFTR	J. WETZEL
CHKR	ES
ENGR	B. FREEMAN
APVD	MBS
DATE	6/5/17

EAGLE CREST SUBSTATION GET-A-WAYS
VAULT INSPECTION FORMS

REV	DRAWING
0	7317-16

FILE: W:\ADD\7000\7317-16.dgn
DATE: 08-Jun-17 16:19

LAYOUT LEGEND:

——— · · · ——— PRIMARY DUCT INSTALLED BY PUD AND WIRE PULLED BY PUD CONTRACTOR

— — — — FUTURE DUCT

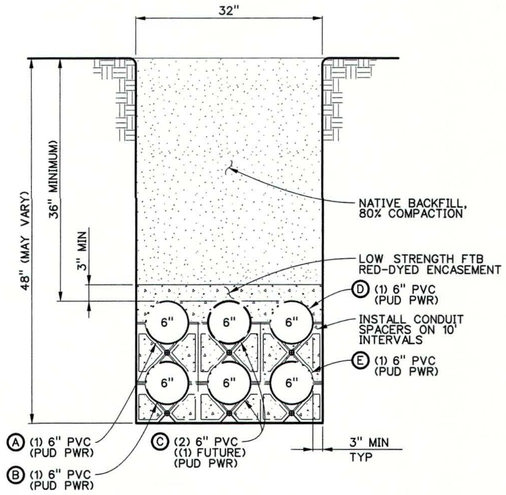

SECTION A / 15
NTS

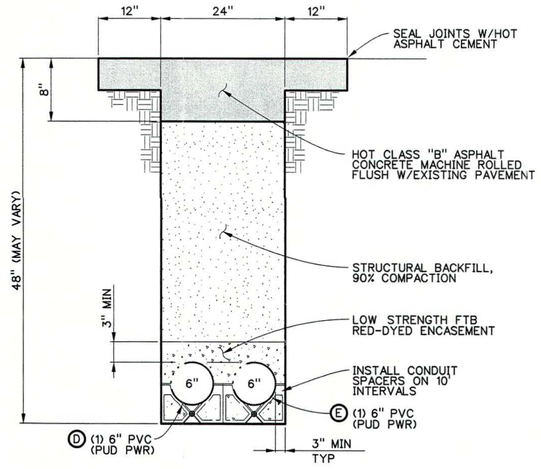

SECTION B / 15
NTS

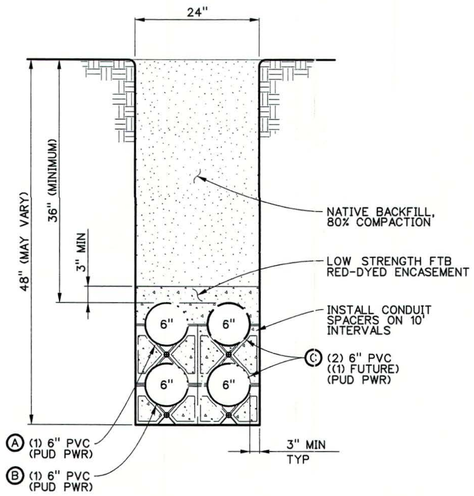

SECTION C / 15
NTS

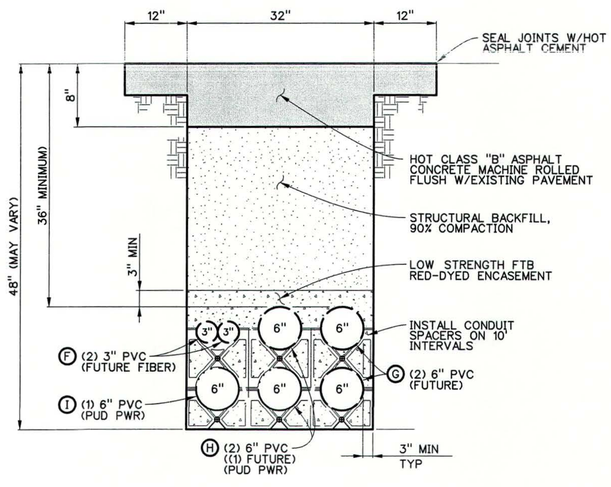

SECTION D / 15
NTS

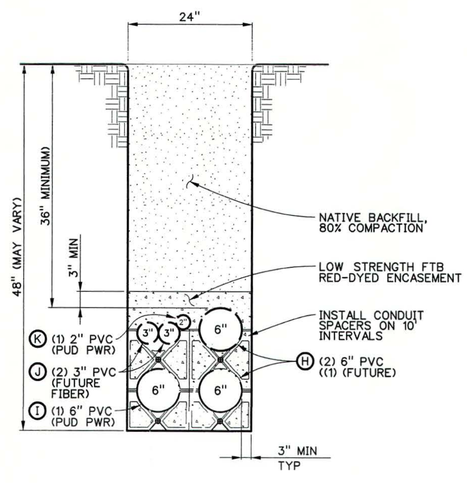

SECTION E / 15
NTS

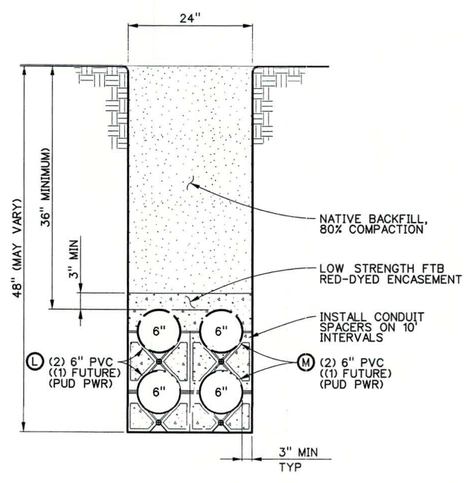

SECTION F / 15
NTS

No.	DATE	BY	DESCRIPTION	ENGR	CHKR	APVD

REVISIONS

SNOHOMISH COUNTY PUD PUBLIC UTILITY DISTRICT NO 1

ORDER	10002622
OPERATION	0060
SCALE	NOTED
DFTR	J. WETZEL
CHKR	ES
ENGR	B. FREEMAN
APVD	MBS
DATE	6/8/17

EAGLE CREEK SUBSTATION GET-A-WAYS
TRENCH SECTIONS

REV	DRAWING
0	7317-17

I:\ENG\JD\7317\7317-17.dgn
DATE: 6/8/2017 08:42

SCHEMATIC LEGEND:

- 1 ø TRANSFORMER
- 3 ø TRANSFORMER
- SUBMERSIBLE TRANSFORMER
- 200 AMP J-BOX
- 600 AMP J-BOX
- FUSE
- PRIMARY UNDERGROUND CABLE
- ABANDONED PRIMARY UNDERGROUND CABLE
- OVHD — EXISTING OVERHEAD
- DISCONNECT SWITCH, NORMALLY OPEN
- DISCONNECT SWITCH, NORMALLY CLOSED
- STANDOFF BRACKET
- FEEDER LINE
- PULL THRU BOX
- FEED THRU BUSHING ON TRANSFORMER
- FAULT INDICATOR
- U — ADDITIONAL UGND TAPPED AT T/O POLE

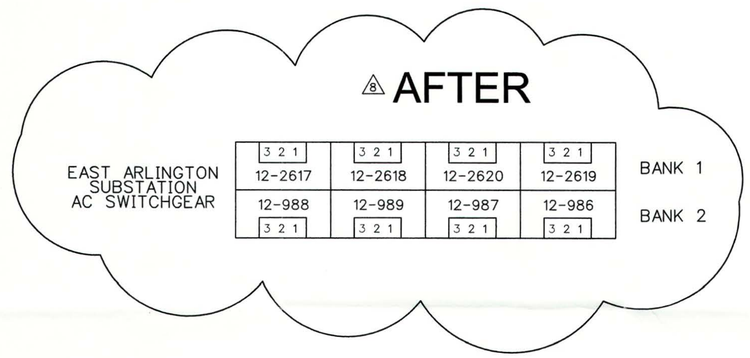

NORTH

FOR BEFORE SCHEMATIC REFER TO SHEET S1B4 9

EAST ARLINGTON 12-986	EAR 986
EAST ARLINGTON 12-987	EAR 987
EAST ARLINGTON 12-988	EAR 988
EAST ARLINGTON 12-989	EAR 989
EAST ARLINGTON 12-2617	EAR 2617
EAST ARLINGTON 12-2618	EAR 2618
EAST ARLINGTON 12-2619	EAR 2619
EAST ARLINGTON 12-2620	EAR 2620

No.	DATE	BY	DESCRIPTION	ENGR	CHKR	APVD
7	5/13	BR	REV PHASING AT POLE XE-5 PER GIS			ES
6	3/12	JHM	REDRAWN TO COLOR STANDARDS			ES
5	2/11	JHM	REVISE CA TAGS PER FIELDING			ES
4	12/93	TJ	REVISE PHASING FOR CKTS AS-987 & 12-2619	EP	TJ	
3	7/93	JMM	REVISE FEEDER 2620 FOR NEW GETAWAY	DOL		MD
2	7/92	JCL	REVISE VAULTS	NF	ALLEN	RB
1	6/92	RLB	ADD FEEDER 2620 & BANK 2 FEEDERS	NF	ALLEN	LR
8	5/17	DAM	ADD SHEET 14	BF	ES	MBS

REVISIONS

SNOHOMISH COUNTY PUD PUBLIC UTILITY DISTRICT NO 1

WO	
TASK	
SCALE	NTS
DFTR	RLB
CHKR	LA
ENGR	FADICH
APVD	JJ
DATE	5/92

SCHEMATIC

REV	DRAWING
8	7317-S1

FILE: W:\ACAD\7300\7317-S1.dgn
DATE: 5/17/2017 9:52

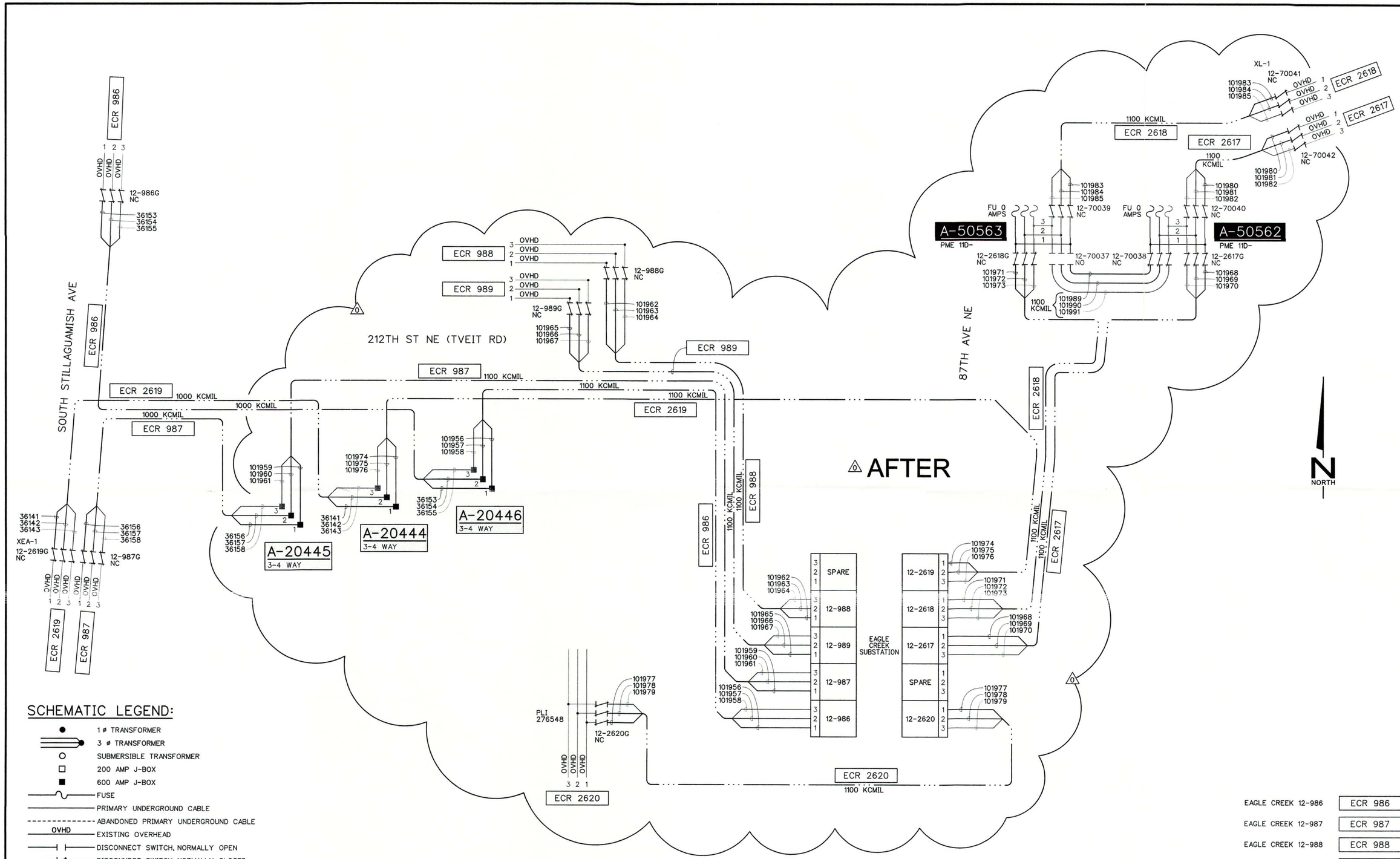

SCHEMATIC LEGEND:

- 1 ø TRANSFORMER
- 3 ø TRANSFORMER
- SUBMERSIBLE TRANSFORMER
- 200 AMP J-BOX
- 600 AMP J-BOX
- FUSE
- PRIMARY UNDERGROUND CABLE
- ABANDONED PRIMARY UNDERGROUND CABLE
- OVHD — EXISTING OVERHEAD
- DISCONNECT SWITCH, NORMALLY OPEN
- DISCONNECT SWITCH, NORMALLY CLOSED
- STANDOFF BRACKET
- FEEDER LINE
- PULL THRU BOX
- FEED THRU BUSHING ON TRANSFORMER
- FAULT INDICATOR
- U — ADDITIONAL UGND TAPPED AT T/O POLE

VAULT LIST

VAULT	SHEET
A-20444 THRU A-20446	1
A-50562 AND A-50563	15

EAGLE CREEK 12-986	ECR 986
EAGLE CREEK 12-987	ECR 987
EAGLE CREEK 12-988	ECR 988
EAGLE CREEK 12-989	ECR 989
EAGLE CREEK 12-2617	ECR 2167
EAGLE CREEK 12-2618	ECR 2618
EAGLE CREEK 12-2619	ECR 2619
EAGLE CREEK 12-2620	ECR 2620

NO.	DATE	BY	DESCRIPTION	ENGR	CHKR	APVD
0	5/17	DAM	ADD SHEET 14	BF	ES	MBS

REVISIONS

SNOHOMISH COUNTY PUD
PUBLIC UTILITY DISTRICT NO 1

ORDER	100002622
OPERATION	0060
SCALE	NTS
DFTR	McPHERSON
CHKR	ES
ENGR	B. FREEMAN
APVD	MBS
DATE	5/26/17

SCHEMATIC

REV	DRAWING
0	7317-S2

FILE: W:\AD\7000\7317\7317-S2.dgn
DATE: 09:Jun:17 08:47

BEFORE SCHEMATIC

SCHEMATIC LEGEND:

- 1 ø TRANSFORMER
- 3 ø TRANSFORMER
- SUBMERSIBLE TRANSFORMER
- 200 AMP J-BOX
- 600 AMP J-BOX
- FUSE
- PRIMARY UNDERGROUND CABLE
- ABANDONED PRIMARY UNDERGROUND CABLE
- OVHD — EXISTING OVERHEAD
- DISCONNECT SWITCH, NORMALLY OPEN
- DISCONNECT SWITCH, NORMALLY CLOSED
- STANDOFF BRACKET
- FEEDER LINE
- PULL THRU BOX
- FEED THRU BUSHING ON TRANSFORMER
- FAULT INDICATOR
- U — ADDITIONAL UGND TAPPED AT T/O POLE

VAULT LIST	
VAULT	SHEET
A-20444 THRU A-20446	1
A-21357	6

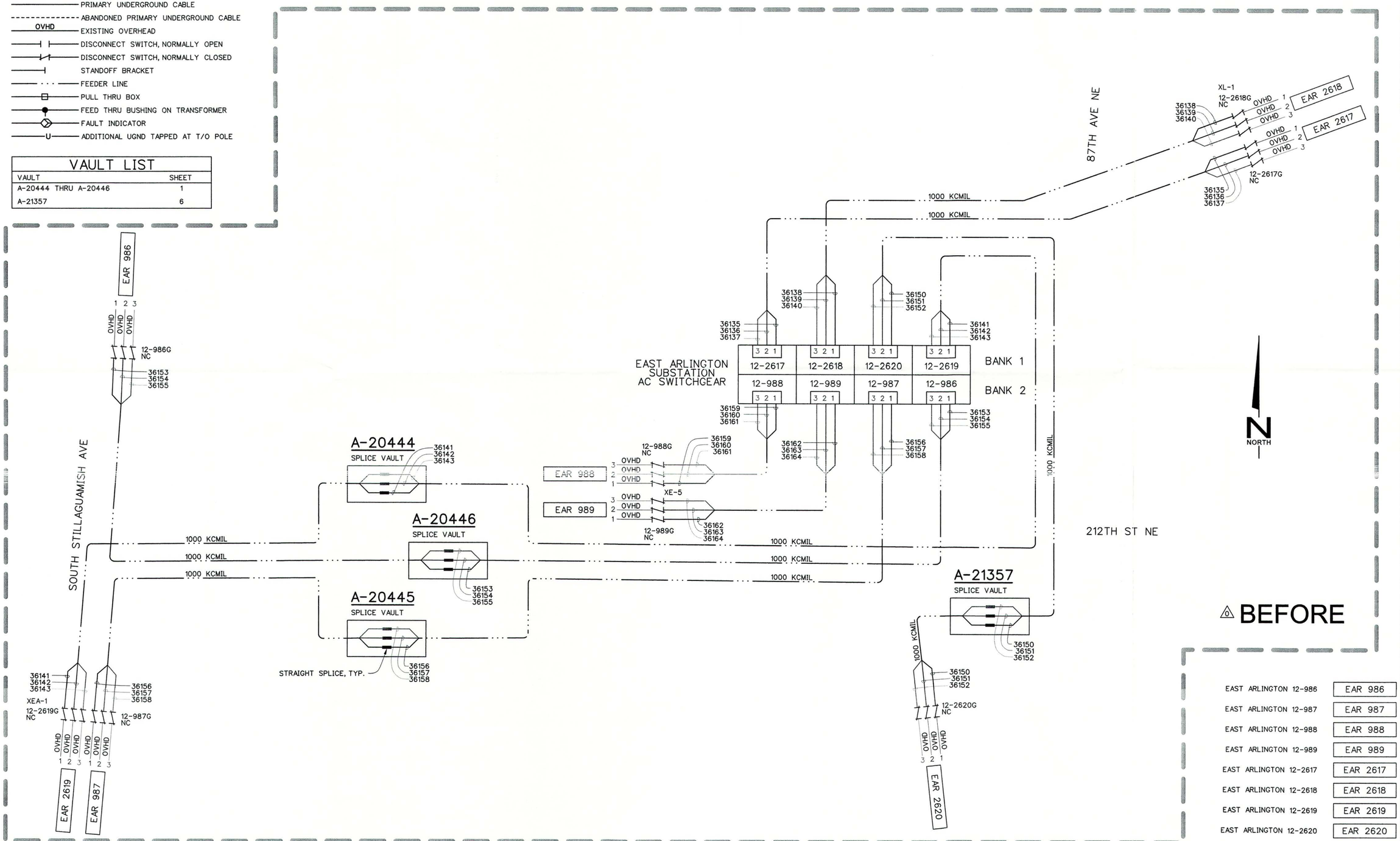

△0 BEFORE

EAST ARLINGTON 12-986	EAR 986
EAST ARLINGTON 12-987	EAR 987
EAST ARLINGTON 12-988	EAR 988
EAST ARLINGTON 12-989	EAR 989
EAST ARLINGTON 12-2617	EAR 2617
EAST ARLINGTON 12-2618	EAR 2618
EAST ARLINGTON 12-2619	EAR 2619
EAST ARLINGTON 12-2620	EAR 2620

No	DATE	BY	DESCRIPTION	ENGR	CHKR	APVD
0	5/17	DAM	ADD SHEET 14	BF	ES	MBS

REVISIONS

SNOHOMISH COUNTY PUD PUBLIC UTILITY DISTRICT NO 1

ORDER	100002622
OPERATION	0060
SCALE	NTS
DFTR	McPHERSON
CHKR	ES
ENGR	B. FREEMAN
APVD	MBS
DATE	5/26/17

SCHEMATIC

REV	DRAWING
0	7317-S1B4

FILE: M:\ACAD\7000\7317\7-S1B4.dgn
DATE: 05-26-2017 08:47