SITE PLAN SYMBOLS

- P — FOR AIRFIELD, NEW BURIED CONDUIT AND CONDUCTORS. SLASHES INDICATE NUMBER OF CONDUCTORS.
- P — FOR AIRFIELD, EXISTING BURIED CONDUIT AND/ OR CONDUCTORS. SLASHES INDICATE NUMBER OF CONDUCTORS.
- P — FOR AIRFIELD, NEW CONDUCTORS IN EXISTING CONDUIT. SLASHES INDICATE NUMBER OF CONDUCTORS.
- W Y — RUNWAY LIGHT INSTALLED OR MODIFIED
- W Y — EXISTING RUNWAY LIGHT
- W W — NEW RUNWAY LIGHT FLUSH MOUNT
- W W — EXISTING RUNWAY LIGHT FLUSH MOUNT

COLOR LEGEND:
W – WHITE/CLEAR
Y – YELLOW
R – RED
G – GREEN
O – OBSCURED

- NEW TAXIWAY EDGE LIGHT
- EXISTING TAXIWAY EDGE LIGHT
- NEW TAXIWAY LIGHT FLUSH MOUNT
- EXISTING TAXIWAY LIGHT FLUSH MOUNT
- NEW ILLUMINATED AIRFIELD SIGN
- EXISTING ILLUMINATED AIRFIELD SIGN
- NEW NON–ILLUMINATED AIRFIELD SIGN
- EXISTING NON–ILLUMINATED AIRFIELD SIGN
- DEMOLITION
- NEW ELECTRICAL HANDHOLE
- EXISTING ELECTRICAL HANDHOLE
- NEW BASECAN HANDHOLE
- EXISTING BASECAN HANDHOLE
- NEW LIGHTED WIND CONE
- EXISTING WIND CONE
- NEW REIL
- EXISTING REIL
- LIGHTED CLOSURE X
- D4 — DEMOLITION IDENTIFICATION SYMBOL SEE SCHEDULE
- R35 — RUNWAY LIGHT FIXTURE IDENTIFICATION SYMBOL SEE SCHEDULE
- T3 — TAXIWAY LIGHT FIXTURE IDENTIFICATION SYMBOL SEE SCHEDULE
- HH1 — HANDHOLE IDENTIFICATION SYMBOL, SEE SCHEDULE
- S4 — SIGN IDENTIFICATION SYMBOL, SEE SCHEDULE
- NEW SITE LIGHTING, SEE LUMINAIRE SCHEDULE
- NEW FLAG LIGHTING, SEE LUMINAIRE SCHEDULE

CALL 48 HOURS
BEFORE YOU DIG
1–800–424–5555

BUILDING PLAN SYMBOLS

- HOMERUN
- E — CONDUIT TRANSITION, i.e. PVC TO GRS
- EQUIPMENT, PURPOSE AS NOTED
- WP — DUPLEX RECEPTACLE, GFCI WP SUBSCRIPT INDICATES WATERPROOF WHILE IN USE
- GROUND
- GROUND ROD
- CONDUIT TURNING DOWN
- CONDUIT TURNING UP
- CONDUIT STUBBED UP AND CAPPED
- CONNECTION TO EQUIPMENT
- DUCT MARKER

ONE–LINE SYMBOLS

- DEMOLITION
- FUSE
- G — GENERATOR
- GROUND
- M — MOTOR
- POWER TRANSFORMER
- SWITCH
- SURGE ARRESTER

COMMISSIONING FOR LIGHTING CONTROLS

FOR LIGHTING CONTROLS THAT INCLUDE DAYLIGHT OR OCCUPANT SENSING AUTOMATIC CONTROLS, AUTOMATIC SHUT–OFF CONTROLS, OCCUPANCY SENSORS, OR AUTOMATIC TIME SWITCHES: THE LIGHTING CONTROLS SHALL BE TESTED, CALIBRATED AND ADJUSTED, SEQUENCES OF OPERATION SHALL BE TESTED TO ENSURE THAT THEY OPERATE IN ACCORD WITH SPECIFICATIONS AND APPROVED PLANS, AND A COMPLETE REPORT OF TEST PROCEDURES AND RESULTS SHALL BE FILED WITH THE OWNER IN ACCORDANCE WITH WASHINGTON STATE ENERGY CODE SECTION 1513.7.

ABBREVIATIONS

A	AMPERE
ACT	ACOUSTIC CEILING TILE
AFF	ABOVE FINISHED FLOOR
AFG	ABOVE FINISHED GRADE
AIC	AMPERE INTERRUPTING CAPACITY
AMP	AMPERE
AUTO	AUTOMATIC
AWG	AMERICAN WIRE GAUGE
BKR	BREAKER
BLDG	BUILDING
C	CONDUIT, CONTROL, CONDUCTOR
CKT	CIRCUIT
℄	CENTERLINE
CMU	CONCRETE MASONARY UNIT
CT	CURRENT TRANSFORMER
CU	COPPER
DIA	DIAMETER
DRM	DISTANCE REMAINING MARKER
DWG	DRAWING
E, ELEC, ELEC	ELECTRICAL
EMT	ELECTRICAL METALLIC TUBING
EQUIP	EQUIPMENT
EXIST	EXISTING
FAA	FEDERAL AVIATION ADMINISTRATION
FLA	FULL LOAD AMPERES
FLEX	FLEXIBLE
FT	FEET, FOOT
FU	FUSE
GFCI	GROUND FAULT CIRCUIT INTERRUPTER
G,GND	GROUND
GRS	GALVANIZED RIGID STEEL
HH	HANDHOLE
HIRL	HIGH INTENSITY RUNWAY LIGHTING
HP	HORSEPOWER
HPS	HIGH PRESSURE SODIUM
HTR	HEATER
ILS	INSTRUMENT LANDING SYSTEM
JB	JUNCTION BOX
KCMIL	THOUSAND CIRCULAR MILS
KIP	KILO INCH POUND
KV	KILOVOLT
KVA	KILOVOLT – AMPERE
KW	KILOWATT
KWH	KILOWATT – HOUR
LO/TO	LOCK–OUT/TAG–OUT
LPA	LIGHTING POWER ALLOWANCE
MALSR	MEDIUM INTENSITY APPROACH LIGHT SYSTEM WITH RUNWAY ALIGNMENT INDICATOR LIGHTS
MAX	MAXIMUM
MH	MANHOLE
MIN	MINIMUM
MIRL	MEDUIM INTENSITY RUNWAY LIGHTING
MLO	MAIN LUGS ONLY
MT	EMPTY
MV	MEDIUM VOLTAGE
N	NEUTRAL
NEMA	NATIONAL ELECTRICAL MANUFACTURERS ASSOCIATION
NFPA	NATIONAL FIRE PROTECTION ASSOCIATION
NIC	NOT IN CONTRACT – TO BE INSTALLED
NREC	NON–RESIDENTIAL ENERGY CODE
NTS	NOT TO SCALE
OOS	OUT OF SERVICE
P	POLE, PUMP, POWER
PB	PULL BOX, PUSHBUTTON
PC	PHOTO–CELL
PH, ø	PHASE
PNL	PANEL
PR	PAIR
PVC	POLYVINYL CHLORIDE
R	RADIUS
RCPT	RECEPTACLE
REIL	RUNWAY END IDENTIFIER LIGHT
RM	ROOM
RSA	RUNWAY SAFETY AREA
RWY, R/W	RUNWAY
SCA	SHORT CIRCUIT AMPS
SCH	SCHEDULE
S.O.	HARD SERVICE OIL–RESISTANT
SPEC	SPECIFICATION
SQ	SQUARE
SS	STAINLESS STEEL
STA	STATION
SW	SWITCH
TVSS	TRANSIENT VOLTAGE SURGE SUPPRESSOR
TYP	TYPICAL
TWY, T/W	TAXIWAY
XFMR	TRANSFORMER
UG	UNDERGROUND
UNO	UNLESS NOTED OTHERWISE
U.S.E.	UNDERGROUND SERVICE ENTRANCE CABLE
UV	UTILITY VAULT, CO.
V	VOLT
VA	VOLT – AMPERE
WP	WATERPROOF

GENERAL NOTES:

A. SPECIAL FAA AND AIRPORT RULES APPLY FOR AIRFIELD WORK. SEE SPECIFICATION REQUIREMENTS.

B. PAVED AREAS MAY HAVE DRAINAGE SYSTEMS INSTALLED ALONG THEIR EDGES. EXERCISE CARE AND RESTORE EXISTING CONDITIONS WHEN INSTALLING CROSSING CONDUITS.

SHEET INDEX

E0.0 LEGEND AND ABREVIATIONS
E1.0 ELECTRICAL SPECIFICATION NOTES
E2.0 EAST RAMP SECURITY LIGHTING SITE PLAN
E2.1 LIGHTING DETAIL AND PANEL SCHEDULE
E3.0 LUMINAIRE SCHEDULE

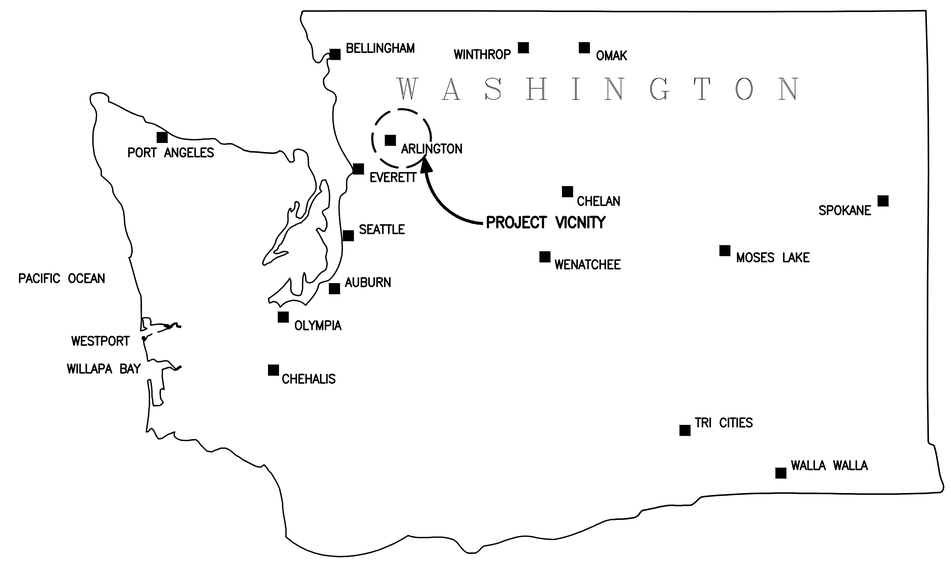

LOCATION MAP

N

PROJECT ADDRESS:
ARLINGTON AIRPORT
18204 59TH DRIVE N.E.
ARLINGTON, WA 98223

POINT OF CONTACT:
DALE CARMAN
AIRPORT SUPERVISOR
360–403–3470

UTILITY CONTACT:
AARON JANISKO
SENIOR DESIGNER
360–435–7508
SNOHOMISH COUNTY PUD

REV. NO.	DATE

DEAN C. RALPHS — STATE OF WASHINGTON — 37489 — REGISTERED PROFESSIONAL ENGINEER
07/20/11

PROJECT ENGINEER	RAB
APPROVED	DCR
DESIGNED	DCR
DRAWN	JDM
DATE	07/20/11
CHECKED	DCR
SCALE	NONE

ELCON ASSOCIATES, INC
ENGINEERS - CONSULTANTS
16300 CHRISTENSEN ROAD, SUITE 330
SEATTLE, WASHINGTON 98188
TEL (206) 243-5022
FAX (206) 243-5205

CITY OF ARLINGTON

ARLINGTON AIRPORT SECURITY LIGHTING

EAST RAMP SECURITY LIGHTING - ARLINGTON, WA

LEGEND AND ABREVIATIONS

SHEET 1 OF 5

DRAWING NO. E0.0

CONTRACT NO. OWNER CONTRACT #

R:\4510-001.00\Dwgs\ZEEO_0.dwg Time:Jul20,2011-09:23am
Login:carla Dimscale:1 LTScale:1 Images:R:\4510-001.00\Dwgs\logo.JPG"
Xrefs:R:\4510-001.00\Dwgs\XTBLK-22x34-E_r1.dwg

ELECTRICAL SPECIFYING NOTES

ELECTRICAL GENERAL

1. This work shall consist of furnishing, installing, testing and placing in operation all equipment, materials, devices and necessary appurtenances to provide a complete and fully operational system, together with such other installations and equipment hereinafter specified and/or shown on the plans.

2. Coordinate and schedule entire work of this section to the satisfaction of the owner and to minimize power outages and interruptions in the facility operations. Verify existing conditions in the field and notify if they may affect the execution of this work.

3. All work shall be in full accordance with the latest applicable federal, state and local codes, regulations and requirements.

4. Throughout this Contract, provide protection for materials and equipment against loss or damage. Maintain construction required for the safety of life or property.

5. Drawings are partly diagrammatic and do not indicate all fittings, hardware, or appurtenances required for a complete operating installation. Unless otherwise noted routing of conduits and location of equipment is approximate only. Verify exact location of equipment and existing conditions in the field and adjust installation of new raceways, devices and equipment as necessary to complete the work. Verify all dimensions before proceeding with the work to ensure available space for new equipment, devices and conduits.

6. Word "provide" means, "furnishing and installing complete in operating condition."

7. Arrange for and obtain all required inspections and certificates pertaining to the work specified and/or shown on the drawings and deliver the certificates to the Engineer in triplicate

8. Submit to the Engineer for review three copies of data sheets and shop drawings for each material, device or equipment at least 20 calendar days before installation including panelboards, circuit breakers, switches, raceways, wires and cables and junction boxes.

9. Provide all first–quality, new materials and equipment, free from any defects, UL tested and approved, designed for seismic conditions where they are being installed.

10. Provide identifying engraved nameplates constructed of plastic (black on white) on all equipment, indicating the name, equipment served, circuit and voltage.

11. Provide support for all electrical equipment, devices and conduits in accordance with NECA "Standard of Installation". Install materials and equipment in a workmanlike manner that has a neat and finished appearance.

12. Do not support equipment or conduits from pipes, ducts, mechanical equipment or existing conduits. Provide support from structural members only. Do not cut any structural members without permission.

13. Fabricate supports from structural steel or steel channels with adequate strength and rigidity. Use spring lock washers under all nuts. Do not use spring clips and clamps.

14. Install all equipment in full compliance with manufacturer's instructions and requirements.

CALL 48 HOURS
BEFORE YOU DIG
1-800-424-5555

RACEWAYS, BOXES & SUPPORTS

1. All raceways, fittings and accessories for each type of raceway shall be the end product of one manufacturer and shall be UL listed and UL labeled. All elbows shall be factory elbows. Rigid aluminum conduit shall not be used.

2. Provide galvanized rigid steel conduit (GRS) minimum size 3/4 inch for all interior cabling and wiring. Provide galvanized steel conduit couplings for connecting conduits.

3. Provide rigid conduit fittings, couplings and accessories. Fittings and accessories shall be threaded and plated. Provide zinc plated steel insulating bushings with tin plated copper grounding saddle and steel clamping tension body, for conduit terminations and zinc plated steel locknuts for securing conduit terminations at enclosures

4. Provide electrical metallic tubing (EMT) conduit minimum size 3/4 inch in lieu of galvanized rigid steel conduit for all interior above grade wiring. Fittings and accessories shall be listed and approved for EMT conduit.

5. Install raceways and their accessories according to applicable codes. Cut raceway ends square, ream, and extend maximum distance into all couplings and connectors. Tighten all fittings securely. Size raceways per code unless specifically noted on the drawings.

6. Provide all necessary pull boxes and junction boxes for pulling and wiring connections, whether specifically shown on the drawings or not.

7. Number of bends in one run of conduit or between any two pull points shall not exceed the equivalent of 270 degrees.

8. Junction boxes and pullboxes shall be NEMA rated and UL listed for the purpose and location intended. Size all boxes to comply with NEC requirements, except where specifically indicated to be larger.

9. Install and secure all raceways especially overhead conduits accordingly to seismic Zone 3 requirements, whether specifically shown on the drawings or not.

10. Provide conduit supports at intervals to meet the requirements of the National Electrical Code and the manufacturer's loading recommendations.

11. Conduit Clamps shall be two hole, cadmium plated or galvanized heavy gauge steel. Do not use plumbers perforated straps.

12. Channels, Fittings, Hangers, Clamps and Accessories shall be electrogalvanized and zinc chromate coated steel. Channels shall be minimum 14 gauge, 1–5/8 inch deep, 1–5/8 inch wide.

13. Provide anchors with sufficient strength to support four times the load. On metal surfaces use machine screws, bolts, or welded studs, on concrete surfaces use expansion anchors. Powder driven studs shall not be used.

14. Provide Schedule 40 polyvinyl chloride (PVC) type rigid nonmetallic conduit for concrete encased duct banks. Provide GRS or PVC type conduit for direct buried aplications.

15. Provide GRS elbows for any transition of PVC conduits from below to above grade.

WIRES, CABLES & GROUNDING

1. Provide UL labeled 600 volt, wires, cables, terminations, splices, and accessories. General Cable, Okonite or equal.

2. Conductors to be type THWN/THHN 90 degree C applied and sized based on the NEC 75 degree C ampacity rating for conductors size #1 AWG and larger and based on the NEC 60 degree C rating for conductors smaller than #1 AWG.

3. Provide solderless type splices, preinsulated "twist–on" type for size #10 AWG and smaller wire, Scotch–Lok or Ideal wire nut. For size #8 through #2 AWG cables, provide compression in line type with preformed insulated cover or plastic insulated tape. Insulating tape shall be 3M Scotch Super 33+ vinyl electrical type or equal.

4. Conductors #1 and larger shall not be spliced unless approved by the Engineer. For size #1 AWG and larger cable, provide compression in line type splices with preformed insulated cover, or heat shrinkable tubing cover. Do not use plastic insulated tape for insulating #1 AWG and larger conductors.

5. Terminations shall be crimp compression type, bolted to equipment or set screw terminal type in equipment not suitable for compression connectors. Conductors #10 and smaller shall utilize eye type compression set terminator when termination is to a bolted or set screw type terminal block. For stranded conductors provide mechanical type lugs.

6. Pull wires and cables after conduits have been cleaned and are free from obstructions. Install wires and cables without cuts or abrasions in the insulation or covering. Do not exceed pulling tension recommended by manufacturers. Where pulling lubricant is needed use only compounds approved by the cable manufacturer.

7. Identification of phase A, B, C and Neutral conductors at termination points and splices shall be as follows:
   a. 120/240 volt:
   A–black, B–red, C–blue, Neutral–white.

8. All wiring connections shall be tested for continuity and ground before connecting loads. Defective cables shall be replaced at no cost to the owner and the tests shall be conducted again.

9. Provide complete grounding system including ground wires and all equipment grounding connections. Provide 600 volt insulated copper ground wire, stranded for #8 and larger wires, sized as required by the NEC and as noted on the drawings.

10. Install separate ground conductor in all rigid and flexible electrical raceways. Flexible raceway shall not be used for grounding.

11. Ground metal sheathing and all exposed metal vertical structural elements of equipment enclosures. Provide good electrical contact between metal frames and railing supporting electrical panels, enclosures, and raceways supplying equipment.

12. Provide copper–clad steel, 3/4–ich diamater, 10–feet long ground rod electrodes. Use exothermic weld connections in all underground applications. Install ground wires and ground rods minimum 20 inches below finish grade.

PANELBOARDS & CIRCUIT BREAKERS

1. Provide circuit breaker panelboards or enclosed circuit breakers as indicated on the drawings. Circuit breakers shall have a frame type and trip rating as shown on the drawings. Panelboards or enclosed circuit breakers shall be UL listed and labeled. By Square–D, General Electric or approved equal.

2. Panelboard or enclosed circuit breakers bus structure and main lugs or main breaker shall have current ratings as shown on the plans. Bus bars shall be copper sized at 1000 amps per square inch. Provide 100% rated insulated neutral bus where shown and separate fully rated ground bus bonded to panelboard cabinet.

3. Each panelboard, as a complete unit, shall have a short circuit current rating equal to or greater than the equipment rating shown on the plans or as specified. Panelboards shall be marked with their maximum short–circuit current rating at the supply voltage.

4. Panelboard assembly shall be enclosed in a steel cabinet NEMA rated for intended location. The gauge of steel to be as specified in UL Standard 50 for cabinets.

5. Fronts shall include doors and have flush, stainless steel, cylinder tumbler–type locks with latches and spring–loaded door pulls. Enclosure finish in manufacturer's standard grey enamel. Doors shall be mounted by completely concealed steel trim clamps or steel hinges. Provide two spare keys for each panel.

6. A circuit directory frame and card with a transparent protective plastic covering shall be provided on the inside of the door. The directory card shall provide a writing space at least 1/4" high x 3" long or equivalent for each circuit.

7. Install panelboards or enclosed circuit breakers in accordance with manufacturer's instructions. Mount plumb and square with the walls where indicated on the plans. Use metal channel to bridge studs above and below panelboards recessed in the walls. Install panelboard cabinet using minimum of four anchors or fasteners.

8. Provide circuit breakers specifically manufactured and listed for designated panelboard or switchboard. Front faces of all circuit breakers shall be flush with each other. Provision for additional breakers shall have all necessary hardware to install breakers without the need for any extra connectors.

9. Circuit breakers shall be molded case bolted type thermal magnetic trip equipped with individually insulated, braced and protected lugs unless otherwise noted on the drawings. Tripping shall be clearly indicated by the external unit operating handle taking a position between ON and OFF.

10. Each circuit breaker shall have a short circuit current rating equal to or greater than rating of designated panelboard or switchboard or as indicated on the drawings.

11. Multi–pole circuit breakers shall have common trip for all poles. Tandem circuit breakers are not allowed.

UNDERGROUND ELECTRICAL

1. Install where shown on the drawings conduits encased in concrete envelope and concrete pads for equipment in accordance with details and as specified herein.

2. Provide minimum of 4 inches of sand on the trench bottom and around of ech duct directly buried below grade.

3. Provide at least 5 inches of concrete at the bottom, top and both sides of ductbank.

4. Install to maintain not less than 24 inches between the top of ductbank and finished grade. Provide minimum cover as required in the NEC Table 300.5 for direct buried conduits.

5. Use long sweep bends having minimum radius of 5 feet for horizontal or vertical changes in direction of 15 degrees or more. Manufactured elbows may be used at the ends of runs with minimum radius not less than 10–times the diamater of the conduit. Manufactured elbows for ducts of less than 2 inches in diameter shall have radius of not less than 18 inches.

6. After completion of duct line pull through each conduit a standard flexible mandrel not less than 12–inches long and diameter 1/4–inch less than inside diameter of the conduit.

7. All concrete shall be plant mix in accordance with Ready Mixed Concrete ASTM C 94 and composed of Portland cement, air entertaining agent (if used), fine aggregate, coarse aggregate and water.

8. Minimum ultimate compressive strength shall be 3000psi at 28–day age measured by testing on standard 6–inch by 12–inch cylinders and with water–cement ratio of 0.47 minimum.

9. Horizontal drilling shall be by contractor with min. 5 years experience. Contractor shall submit plan to owner for prevention of post–construction soil subsidence in bid.

ACCEPTANCE TESTING

1. Conduct specified tests after completion of all work and prior to energization.

2. Independent contractor may be retained to perform some or all of required tests. Testing contractor or firm shall be a full member in International Electrical Testing Association (NETA).

3. Copies of the test results shall be submitted to the Engineer and the Owner for review and approval.

4. Perform phase–to–phase and phase–to–ground insulation resistance testing for all 600V conductors with a 1000–volt megger applied for 1 minute. Disconnect all equipment that might be damaged by this test.

5. Minimum acceptable insulation resistance is 100 megohm or as accepted by the Engineer.

6. Test dry–type transformers and circuit breakers as required by the latest edition of NETA Acceptance Testing Specifications.

REV. NO.	DATE

DEAN C. RALPHS — STATE OF WASHINGTON — 37489 — REGISTERED PROFESSIONAL ENGINEER
07/20/11

PROJECT ENGINEER	RAB
APPROVED	DCR
DESIGNED	DCR
DRAWN	JDM
DATE	07/20/11
CHECKED	DCR
SCALE	NONE

ELCON ASSOCIATES, INC
ENGINEERS - CONSULTANTS
16300 CHRISTENSEN ROAD, SUITE 330
SEATTLE, WASHINGTON 98188
TEL (206) 243-5022
FAX (206) 243-5205

CITY OF ARLINGTON

ARLINGTON AIRPORT SECURITY LIGHTING
EAST RAMP SECURITY LIGHTING - ARLINGTON, WA

ELECTRICAL SPECIFICATION NOTES

CONTRACT NO. OWNER CONTRACT #

SHEET 2 OF 5

DRAWING NO. **E1.0**

R:\4510-001.00\Dwgs\V2EE1_0.dwg Time:Jul20,2011-09:23am
Layout:Curt's Dimscale:1 LtScale:1 Images:R:\4510-001.00\Dwgs\logo.JPG
Xrefs:R:\4510-001.00\Dwgs\XTBLK-22X34-E_1.dwg

CONDUIT SCHEDULE			
ID	SIZE	CONDUCTORS	CIRCUIT
C01	(1) 1" PVC	2#6, 1#10G	AP-1(14,16)
C02	(1) 1.5" PVC	3#6, 1#10G	AP-1(14,16,18)
		3#6, 1#10G	AP-1(33,35,37)
C03	(1) 1.5" PVC	2#6, 1#10G	AP-1(14,18)
		3#6, 1#10G	AP-1(33,35,37)
C04	(1) 1" PVC	3#6, 1#10G	AP-1(33,35,37)
C05	(1) 1" PVC	2#6, 1#10G	AP-1(35,37)

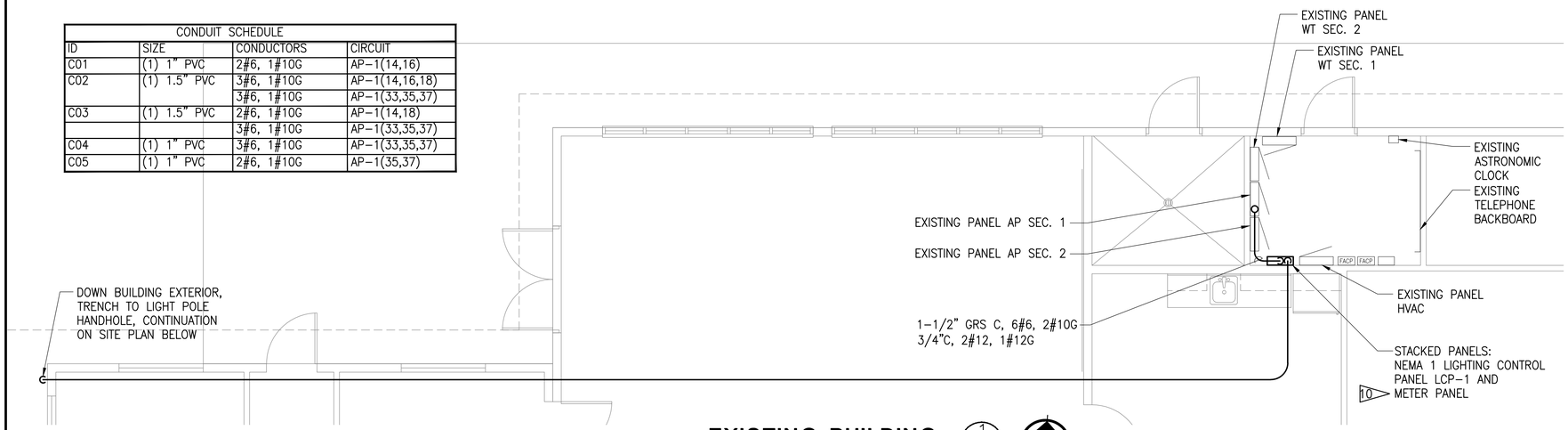

EXISTING BUILDING

SCALE: 1/4" = 1'-0"

1 / E2.0

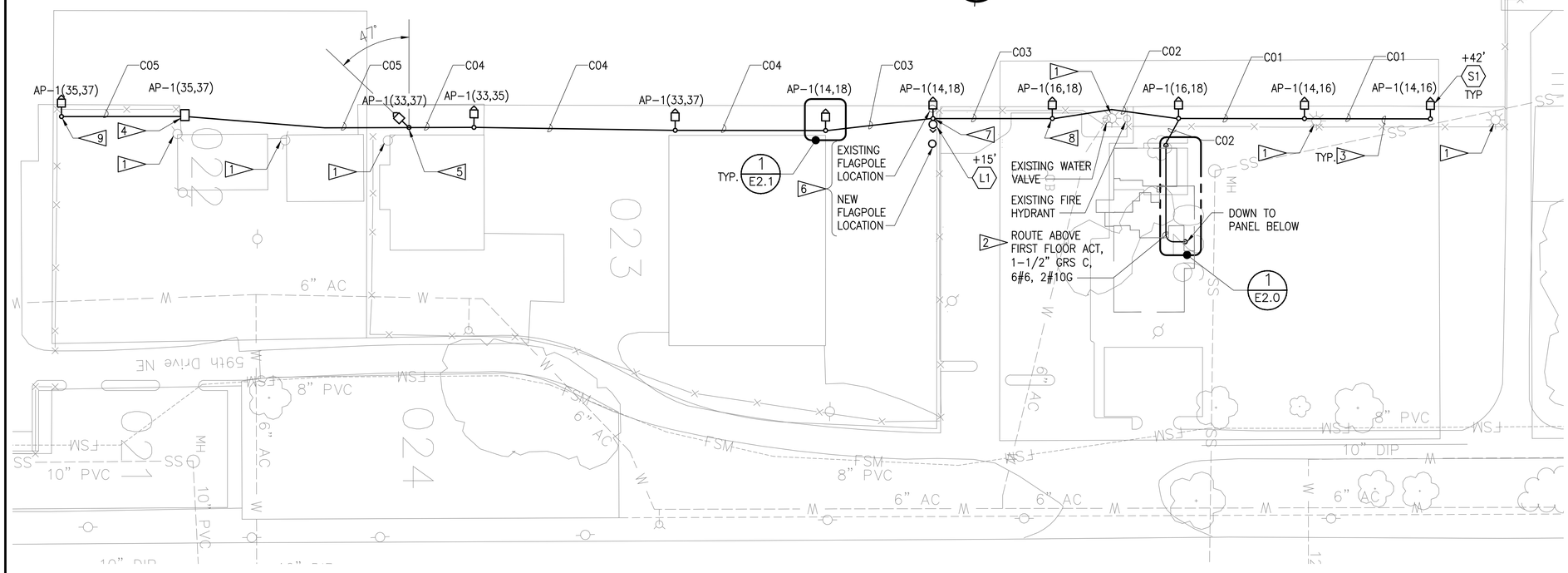

EAST RAMP SECURITY LIGHTING SITE PLAN

1" = 50'

1"=50'

50 0 50 100
scale feet

GENERAL NOTES:

1. LIGHTS WILL OPERATE DUSK TO DAWN.
2. MINIMIZE DISTURBANCE OF EXISTING LANDSCAPE. RESTORE ALL IMPACTED LANDSCAPING TO MATCH ORIGINAL CONDITION.
3. ALL LIGHT POLE HANDHOLES TO FACE WEST TOWARDS THE RAMP AREA (AWAY FROM THE FENCE) UNLESS NOTED OTHERWISE.
4. HORIZONTALLY BORE UNDERGROUND CONDUITS SOUTH OF EXISTING WATER VALVE. TRENCH UNDERGROUND CONDUITS NORTH OF EXISTING WATER VALVE.

KEYED NOTES:

1. EXISTING SITE LIGHTING WITH OVERHEAD WIRING TO REMAIN.
2. CONDUIT ROUTING IS DIAGRAMMATIC. VERIFY AVAILABLE CLEARANCE FOR CONDUIT ROUTING AND ADJUST AS REQUIRED.
3. TRENCH HANDHOLES. INSTALL HANDHOLES AND LIGHT POLE BASES. PATCH EXISTING CEMENT TO MATCH EXISTING.
4. PROVIDE HANDHOLE SIMILAR TO THAT SHOWN IN DWG E2.1, DETAIL 1 FOR FUTURE LIGHT POLE CONNECTION. WIRE IS SIZED TO SUPPLY THE FUTURE FIXTURE.
5. FIXTURE TILTED AT 65° FROM NADIR (STRAIGHT DOWN).
6. RELOCATE EXISTING FLAG POLE AS SHOWN. NEW FLAG POLE LOCATION SHALL BE 20' CLEAR OF LIGHT POLE.
7. ORIENT LIGHT POLE SO THE POLE HANDHOLE IS FACING SOUTH, AWAY FROM THE FENCE. FLAGPOLE BULLHORN BRACKET SHALL NOMINALLY POINT TOWARDS THE EAST. SEE ALSO DETAIL 1 ON DWG E2.1.
8. ORIENT LIGHT POLE SO THE POLE HANDHOLE IS FACING EAST, AWAY FROM THE FENCE.
9. ORIENT LIGHT POLE SO THE POLE HANDHOLE IS FACING NORTH, AWAY FROM THE FENCE.
10. PROVIDE REVENUE GRADE 100A, 208V, 3ø POWER METER WITH DIGITAL LCD DISPLAY WITHOUT MULTIPLIER SHOWING CUMULATIVE KWH AND KW LOAD, E-MON D-MON 208100D KIT OF EQUIVALENT. INSTALL PER MANUFACTURER'S DOCUMENTATION.

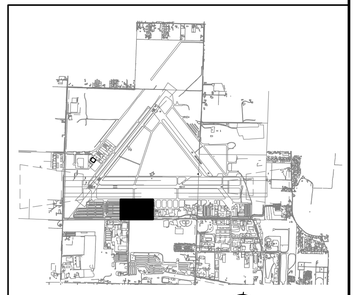

KEY PLAN

CALL 48 HOURS
BEFORE YOU DIG
1-800-424-5555

REV. NO.	DATE

DEAN C. RALPHS — STATE OF WASHINGTON — 37489 — PROFESSIONAL ENGINEER
07/20/11

PROJECT ENGINEER	RAB
APPROVED	DCR
DESIGNED	MOK
DRAWN	JDM
DATE	07/20/11
CHECKED	DCR
SCALE	1" = 50'

ELCON ASSOCIATES, INC
ENGINEERS - CONSULTANTS
16300 CHRISTENSEN ROAD, SUITE 330
SEATTLE, WASHINGTON 98188
TEL (206) 243-5022
FAX (206) 243-5205

CITY OF ARLINGTON

ARLINGTON AIRPORT SECURITY LIGHTING

EAST RAMP SECURITY LIGHTING - ARLINGTON, WA

EAST RAMP SECURITY LIGHTING SITE PLAN

CONTRACT NO. OWNER CONTRACT #

SHEET 3 OF 5

DRAWING NO. E2.0

R:\4510-001.00\Dwgs\XEE2_0.dwg Time:Jul20,2011-09:23am
Logincurrts Dimscale:48 LTScale:1 Images:R:\4510-001.00\Dwgs\logo.JPG"
Xrefs:"R:\4510-001.00\Dwgs\XTBLK-22X34-E_1.dwg"R:\4510-001.00\Dwgs\AIRPORT.DWG"R:\4510-001.00\Dwgs\XVIEWPORTS.dwg"R:\4510-001.00\Dwgs\XELEC_R2.dwg"\2830plan.dwg"2830tbk.dwg

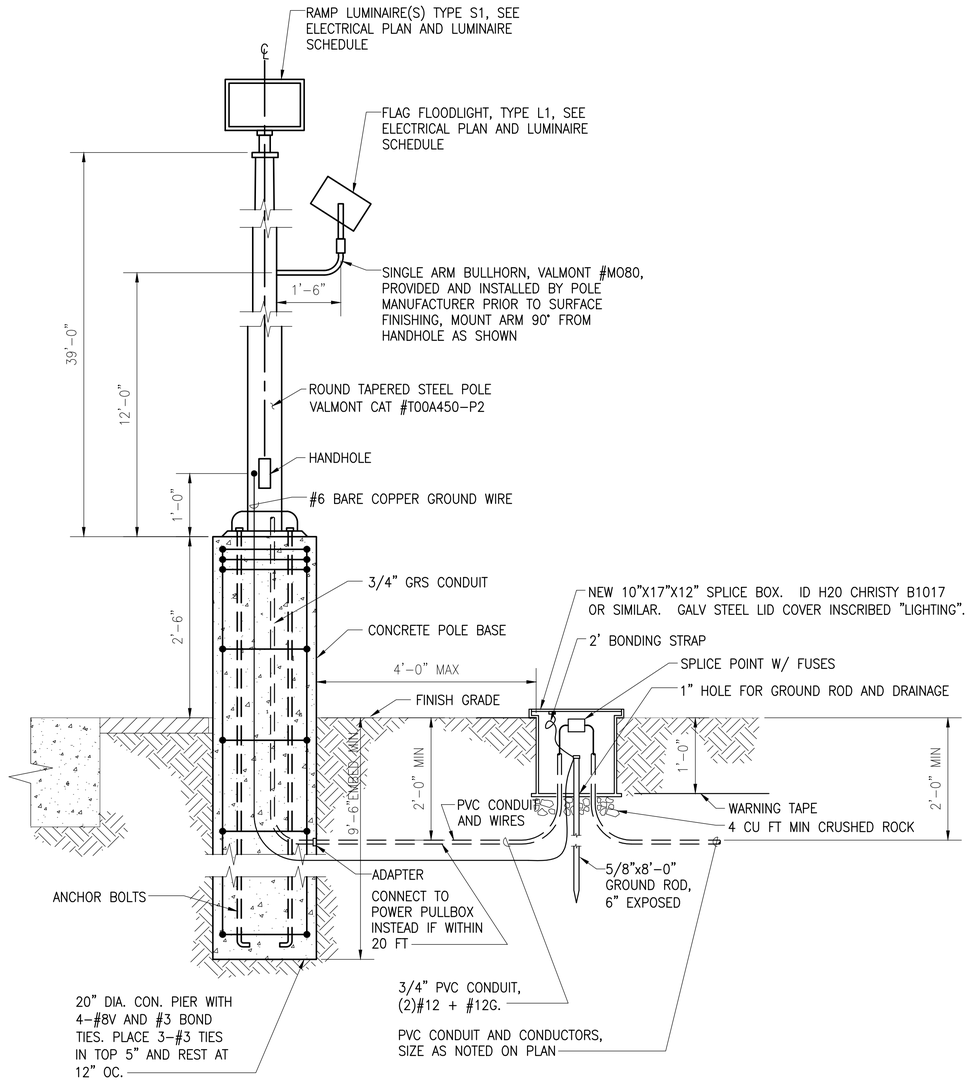

LUMINAIRE POLE BASE FOUNDATION AND HANDHOLE DETAIL

SCALE: NTS

1 / E2.0

CALL 48 HOURS BEFORE YOU DIG 1-800-424-5555

PANEL NAME: **AP-1**
LOCATION: Airport Office Bldg Elec. Rm
SHORT CIRCUIT RATING: AIC
MOUNTING:
NEMA RATING: 1

BUS RATING (AMP): 400 3 PHASE
VOLTAGE: 120 / 208 4 WIRE
MAIN BKR: 300
FEED: Bottom
NUMBER OF POLES: 42

NO.	CIRCUIT DESCRIPTION	CB/PH	KVA	PH	KVA	CB/PH	CIRCUIT DESCRIPTION	NO.
1	Lighting – Exterior	20/1		A		20/1	Lighting	2
3	Lighting	20/1		B		20/1	Receptacles	4
5	Lighting	20/1		C		20/1	Receptacles	6
7	Lighting	20/1		A		20/1	Receptacles	8
9	Sub Panel A	150/3		B		20/1	Receptacles	10
11	--	--		C		20/1	Receptacles	12
13	--	--		A	**2.35**	**30/3**	**East Ramp Lighting (North), Flag Ltg**	14
15	--	--		B	**2.30**	--	--	16
17	--	--		C	**2.35**	--	--	18
19	--	--		A		20/1	Receptacles	20
21	HVAC Subpanel	100/3		B		20/1	Receptacles	22
23	--	--		C		20/2	Electric Heaters #1 and #2	24
25	--	--		A		--	--	26
27	HVAC Backup Strip Heater	50/3		B		40/2	Hot Water Heater #1	28
29	--	--		C		--	--	30
31	--	--		A		20/1	Bollards & Poles	32
33	**East Ramp Lighting (South)***	**30/3**	**1.70**	B		20/1	Receptacles	34
35	--	--	**1.70**	C		20/1	Receptacles	36
37	--	--	**2.30**	A		20/1	Receptacles	38
39	Front Sign	20/1		B	**0.10**	**15/1**	**Ramp Ltg Control Pnl, Photocell**	40
41	Attic Light	20/1		C			space	42

LOAD	CON LD (KVA)	DEM FCT (%)	DEM LD (KVA)
SUB FEED		100%	
LIGHTING	12.70	125%	15.88
RECEPT <10KVA		100%	
RECEPT >10KVA		50%	
MOTORS ALL		100%	
LARGEST		25%	
HEATING			
COOLING			
KITCHEN		100%	
MISC. & COMP		100%	
MISC CONT.	0.10	125%	0.13

KVA/PHASE A:	4.65	CONNECTED LOAD IN KVA:	13
KVA/PHASE B:	4.10	DEMAND LOAD IN KVA:	16
KVA/PHASE C:	4.05	MAXIMUM AMPS PER PHASE:	39

SPECIAL INSTRUCTIONS:
* – Load shown anticipates future installation of 1 matching light fixture. Actual load for this project will be four-fifths of that shown for this circuit.

Update Panel schedule with above.
Renumber breakers on right side for consistency.
59kW Connected Load (Existing per SnoPUD)

REV. NO.	DATE

DEAN C. RALPHS — STATE OF WASHINGTON — 37489 — REGISTERED PROFESSIONAL ENGINEER — 07/20/11

PROJECT ENGINEER	RAB
APPROVED	DCR
DESIGNED	MOK
DRAWN	JDM
DATE	07/20/11
CHECKED	DCR
SCALE	NONE

ELCON ASSOCIATES, INC
ENGINEERS - CONSULTANTS
16300 CHRISTENSEN ROAD, SUITE 330
SEATTLE, WASHINGTON 98188
TEL (206) 243-5022
FAX (206) 243-5205

CITY OF ARLINGTON

ARLINGTON AIRPORT SECURITY LIGHTING

EAST RAMP SECURITY LIGHTING - ARLINGTON, WA

LIGHTING DETAIL AND PANEL SCHEDULE

CONTRACT NO. OWNER CONTRACT #

SHEET 4 OF 5

DRAWING NO. E2.1

R:\4510-001.00\Dwgs\V2EE2_1.dwg Time:Jul20,2011-09:23am
Layout:Curtis Dimscale:1 LtScale:1 Images:R:\4510-001.00\Dwgs\logo.JPG"
Xrefs:R:\4510-001.00\Dwgs\VTBLK-22X34-E_1.dwg

LUMINAIRE SCHEDULE

LUMINAIRE SYMBOL	LUM TYPE	LAMP TYPE	VOLTS	LOAD (WATTS)	LUMINAIRE DESCRIPTION	LAMPS TYPE & COLOR TEMP	FINISH	MOUNTING	MANUFACTURER/ SERIES # *
	L1	LED	208V	101	ADJUSTABLE FLAGPOLE FLOODLIGHT, NOMINAL 16-3/8"WIDE x 13"HIGH x 7-7/8" DEEP, CAST AL HOUSING AND HEAT SINK, FULLY SEALED AND GASKETED, NOMINAL 16.4"H x 44.7"V 50% BEAMSPREAD, NOMINAL 18,525 MAX CANDELA, FIELD REPLACEABLE LIGHT ENGINE AND DRIVER, RoHS COMPLIANT, POLYESTER POWDER COAT FINISH, YOKE MOUNTED TO INTEGRAL SLIPFITTER FOR 2-3/8" TENON, POLE MANUFACTURER TO PROVIDE BULLHORN ARM BRACKET MOUNTED TO SIDE OF POLE, SEE ALSO POLE ELEVATION DETAIL, SEE ELECTRICAL PLAN FOR FIXTURE QUANTITIES PER POLE, UL LISTED FOR WET LOCATIONS, MOUNT LAMP FOR FULL ILLUMINATION OF FLAT, APPROX. +45°-65°.	(1) LED ENGINE WITH 49 WHITE LEDS WITH FROSTED PLASTIC OPTICS, 4000°K (90 WATTS)	SILVER ALUMINUM	YOKE/ SLIPFITTER	DAY-BRITE #FSI-90WLU-ISF (FIXTURE) VALMONT #M080 (SINGLE BRACKET ARM)
	S1	HPS	208V	1100	AIRFIELD ADJUSTABLE FLOODLIGHT, NOMINAL 21.4"LONGx 17.4"WIDE LENS, SMOOTH SCOOP SHAPED AL HOUSING, AL DOOR FRAME WITH 7/32" TEMPERED GLASS LENS, FULLY SEALED AND GASKETED, SEPARATE LAMP HOUSING WITH TILT ADJUSTMENT ATTACHED TO BALLAST HOUSING, BALLAST HOUSING MOUNTS TO POST-TOP TENON, MAX. CP AT 65 DEGREES FROM VERTICAL FOR AN EVEN SURFACE WASH, POLYESTER POWDER COAT FINISH, 39' ROUND TAPERED STEEL POLE, SEE ALSO POLE FOUNDATION DETAILS, SEE ELECTRICAL PLANS FOR FIXTURE QUANTITIES PER POLE, UL LISTED FOR WET LOCATIONS	(1) 1000W E25 CLEAR HPS	STANDARD	POLE	WIDELITE #AFS-1000-C (FIXTURE) VALMONT #DS210 (POLE) #MD102-030-01 (2 BRACKET ARMS)

* MANUFACTURER AND MODEL INFORMATION REPRESENT THE DESIGN BASIS. SEE GENERAL NOTE 2 FOR SUBSTITUTION REQUIREMENTS.

GENERAL NOTES:

1. ALL FIXTURE TYPES SHALL INCLUDE INTEGRAL PHOTOELECTRIC CELL AND FUSING IF AVAILABLE AS A STANDARD OPTION.
2. "OR EQUAL" SUBSTITUTIONS MUST PROVIDE, IN ADDITION TO COMPLETED FIXTURE CUT SHEETS, ISO-FOOTCANDLE CALCULATIONS FOR REVIEW USING THE SAME LIGHT LOSS FACTORS AND LAMP LUMENS FOR SIMILAR LAMPS AS SHOWN ON DRAWING LTG-1. AGI32 FILE WILL BE PROVIDED UPON REQUEST FOR INCORPORATING PROPOSED FIXTURES INTO THE COMPUTER MODEL SHOWN ON ILLUMINATION PLANS.
3. "OR EQUAL" SUBSTITUTIONS FOR TYPE L1 MUST PROVIDE, IN ADDITION TO COMPLETED FIXTURE CUT SHEETS, ISO-FOOTCANDLE CALCULATIONS FOR REVIEW USING 0.7 LIGHT LOSS FACTOR FROM A 42 FT MOUNTING HEIGHT AIMED AT A PLANE PERPENDICULAR TO THE BEAM CENTERLINE. ISO-FOOTCANDLE CALCULATIONS TO INCLUDE CURVES AT 10FC, 5FC, 2FC, 1FC AND 0.5 FC.

KEYED NOTES:

1. PROVIDE (3) CT'S IN LCP-1. CONNECT TO LCD DISPLAY PANEL FOR MONITORING OF RAMP LIGHTING TOTAL LOAD.

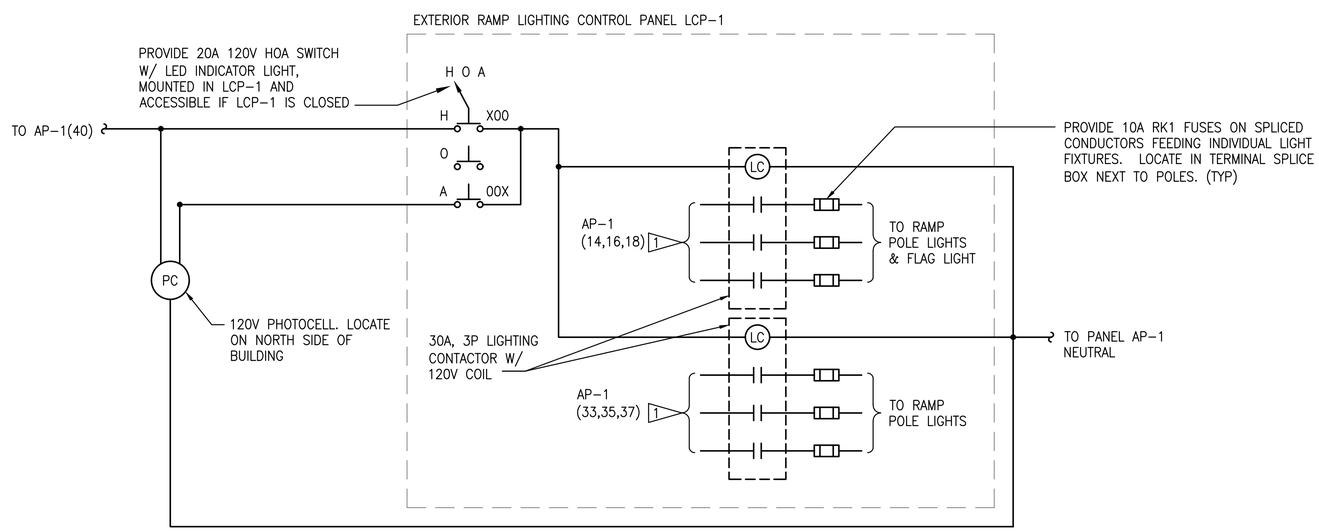

EXTERIOR RAMP LIGHTING CONTROL DIAGRAM (1 / E2.0)

SCALE: NTS

CALL 48 HOURS BEFORE YOU DIG 1-800-424-5555

R:\4510-001.00\Dwgs\v2EE3_0.dwg Time:Jul20,2011-09:23am
Login:curtis Dimscale:1 LTScale:1 Images:R:\4510-001.00\Dwgs\Logo.JPG
Xrefs:R:\4510-001.00\Dwgs\VTBLK-22X34-E_01.dwg

REV. NO.	DATE

DEAN C. RALPHS — STATE OF WASHINGTON — 37489 — REGISTERED PROFESSIONAL ENGINEER — 07/20/11

PROJECT ENGINEER	RAB
APPROVED	DCR
DESIGNED	MOK
DRAWN	MOK
DATE	07/20/11
CHECKED	DCR
SCALE	NONE

ELCON ASSOCIATES, INC
ENGINEERS - CONSULTANTS
16300 CHRISTENSEN ROAD, SUITE 330
SEATTLE, WASHINGTON 98188
TEL (206) 243-5022
FAX (206) 243-5205

CITY OF ARLINGTON

ARLINGTON AIRPORT SECURITY LIGHTING

EAST RAMP SECURITY LIGHTING - ARLINGTON, WA

LUMINAIRE SCHEDULE

SHEET 5 OF 5

DRAWING NO. **E3.0**

CONTRACT NO. OWNER CONTRACT #