CITY OF ARLINGTON

AIRPORT BOULEVARD ROAD IMPROVEMENTS - PHASE 1B

PROJECT NO. P02.347

FEDERAL AID NO. STPUS-2693(004)

SHEET INDEX

SHEET TITLE	SHEET NO.	REFERENCE SHEET NO.
COVER SHEET	1	–
ROADWAY SECTIONS AND LEGEND	2	RS1
ROADWAY SECTIONS	3	RS2
PLAN AND PROFILE – STA 10+00 TO STA 17+00	4	PP1
PLAN AND PROFILE – STA 17+00 TO STA 24+00	5	PP2
PLAN AND PROFILE – STA 24+00 TO STA 32+00	6	PP3
PLAN AND PROFILE – STA 32+00 TO STA 40+00	7	PP4
PLAN AND PROFILE – STA 40+00 TO STA 48+00	8	PP5
PLAN AND PROFILE – STA 48+00 TO STA 53+83.25	9	PP6
PLAN AND PROFILE – STA 53+83.25 TO STA 65+00	10	PP7
PLAN AND PROFILE – STA 65+00 TO STA 73+00	11	PP8
PLAN AND PROFILE – STA 73+00 TO STA 83+51.40	12	PP9
WATER MAIN DETAILS	13	WP1
WATER MAIN PROFILES	14	WP2
SANITARY SEWER PROFILES	15	SP1
INTERSECTION DETAILS	16	ID1
INTERSECTION DETAILS	17	ID2
CHANNELIZATION AND SIGNING PLAN	18	CH1
CHANNELIZATION AND SIGNING PLAN	19	CH2
RAIN GARDEN PLANTING PLAN & DETAILS	20	L1
LANDSCAPING PLANTING PLAN & DETAILS	21	L2
IRRIGATION PLAN – STA 10+00 TO STA 21+00	22	LP1
IRRIGATION PLAN – STA 54+00 TO STA 73+00	23	LP2
IRRIGATION PLAN – STA 73+00 TO STA 83+00	24	LP3
IRRIGATION LEGEND, DETAILS AND NOTES	25	LP4

SEC 21 T31N R5E WM

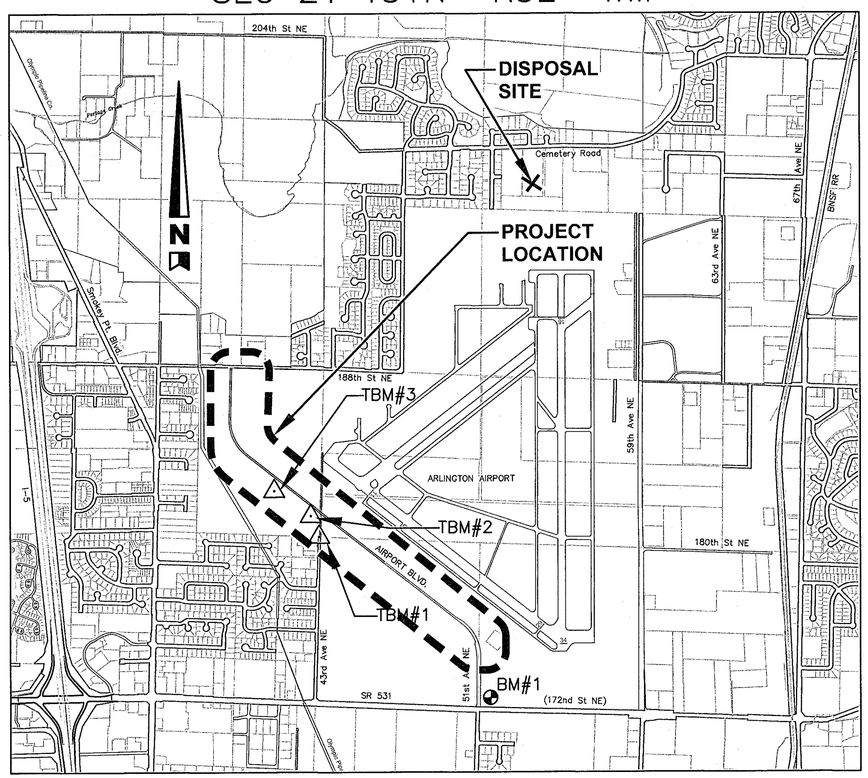

VICINITY MAP

N.T.S.

DISPOSAL SITE:

CONTRACTOR MAY DISPOSE OF SURPLUS SOIL MATERIAL ON AIRPORT PROPERTY AS DIRECTED BY THE CITY.

AECOM

710 2nd Ave, Suite 1000
Seattle, Wa 98104
T 206.624.9349

WWW.AECOM.COM

City of Arlington Officials

MAYOR
BARBARA TOLBERT

COUNCIL MEMBERS
STEVE BAKER
CHRIS RAEZER
DEBORA NELSON
KEN KLEIN
MARILYN OERTLE
RICHARD (DICK) BUTNER
RANDY TENDERING

PUBLIC WORKS DIRECTOR
JAMES KELLY, P.E.

APPROVED FOR CONSTRUCTION

J. X Kelly

JAMES KELLY, PE
PUBLIC WORKS DIRECTOR

05-16-13

DATE APPROVED

Last Saved By: huschkab Apr 25, 2013 – 1:42pm

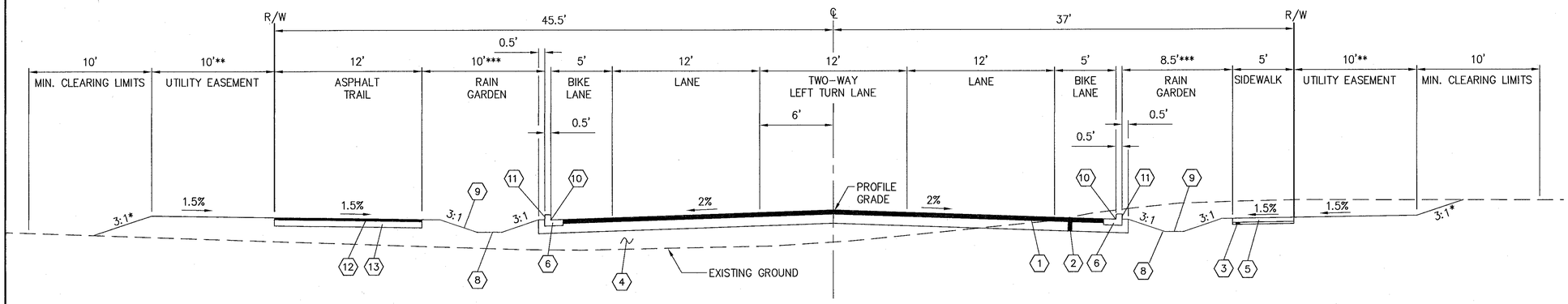

AIRPORT BOULEVARD ROADWAY SECTION A

N.T.S.

STA 53+83.25 TO STA 75+50
STA 77+00 TO STA 79+00
STA 80+42 TO STA 83+51.40

* STA 53+83.25 TO STA 78+50 LT & RT = 3:1
STA 78+50 TO STA 79+00 LT & RT VARIES 3:1 TO 6:1
STA 80+42 TO STA 83+51.40 LT & RT = 6:1

** STA 53+83.25 TO STA 70+25, LT & RT = 10' UTILITY EASEMENT
STA 78+50 TO STA 79+00, LT & RT = VARIES 10' TO 1'
STA 80+42 TO STA 83+51.40, LT & RT: SEE ROADWAY SECTION B FOR DIMENSIONS AND SLOPES BEYOND TRAIL/SIDEWALK

*** STA 53+83.25 TO 56+00, LT WIDTH VARIES FROM 6.5' TO 10'
STA 53+83.25 TO 56+00, RT WIDTH VARIES FROM 6.5' TO 8.5'

ROADWAY SECTION LEGEND

1. 0.33' HMA CL. 1/2 IN. PG 64-22 (2 LIFTS)
2. 0.75' CRUSHED SURFACING BASE COURSE
3. 0.17' CRUSHED SURFACING TOP COURSE
4. SELECT EXCAVATED MATERIAL
5. CEMENT CONC. SIDEWALK – 4" DEPTH. SEE WSDOT STANDARD PLAN F-30.10-01
6. CEMENT CONC. TRAFFIC CURB AND GUTTER. SEE WSDOT STANDARD PLAN F-10.12-02
7. CEMENT CONC. TRAFFIC CURB. SEE WSDOT STANDARD PLAN F-10.12-02
8. RAIN GARDEN, SEE DETAILS ON SHEET RS2
9. SEE LANDSCAPING PLAN.
10. FOR RAIN GARDEN CURB CUT LOCATIONS SEE TABLE, SHEETS PP7 – PP9 AND DETAIL ON SHEET L1
11. BACK OF CURB TO BE FINISHED.
12. 0.17' HMA CL 1/2 IN, PG 64-22.
13. 0.50' CRUSHED SURFACING BASE COURSE.

NOTES:

1. ALL ADA FACILITIES SHALL BE IN ACCORDANCE WITH THE LATEST EDITION OF THE PROPOSED RIGHT-OF-WAY ACCESSIBILITY GUIDELINES (PROWAG) GUIDELINES.
2. UNLESS OTHERWISE SPECIFIED ON THE PLANS, OR DIRECTED BY THE ENGINEER, CROSS SLOPES OF SIDEWALKS SHALL BE A NOMINAL 1.5%. CROSS SLOPES SHALL NOT BE LESS THAN 1% NOR EXCEED 2%.
3. MAXIMUM SLOPES SHOWN ON THE PLANS REPRESENT THE MAXIMUM ALLOWABLE SLOPES PERMITTED BY CURRENT ADA REQUIREMENTS. THE CONTRACTOR SHALL TAKE INTO CONSIDERATION CONSTRUCTION TOLERANCES WHEN PLACING SIDEWALKS TO INSURE MAXIMUM SLOPES ARE NOT EXCEEDED.
4. COMPLETED SIDEWALKS OR OTHER HARDSCAPE ELEMENTS THAT EXCEED MAXIMUM SPECIFIED SLOPES OR ARE LESS THAN MINIMUM SPECIFIED SLOPES SHALL BE REMOVED AND REPLACED BY THE CONTRACTOR AT THE CONTRACTORS EXPENSE.
5. MEASUREMENT OF SLOPES SHALL BE PERFORMED ON THE WALKABLE SURFACE AND SHALL NOT TAKE INTO CONSIDERATION THE CURB ELEVATION.
6. CLEARING LIMITS SHALL BE TO CUT AND FILL LIMITS OR A MINIMUM 10' FROM UTILITY EASEMENT.

PROJECT CONTROL

BASIS OF BEARING

NAD 83/91, WASHINGTON STATE PLANE COORDINATE SYSTEM, NORTH ZONE PER WASHINGTON COUNCIL OF COUNTY SURVEYORS SURVEY CONTROL DATABASE

BM #1:

WASHINGTON COUNCIL OF COUNTY SURVEYORS SURVEY CONTROL DATABASE PT ID: 3723, 3" BRASS DISK IN CONC SIDEWALK MKD "WSDOT SURVEY MONUMENT 1998 GP31531-162".
NE QUAD OF INTX OF 172ND ST & 51ST AVE.
ELEV=125.07' (NAVD88)

TBM #1:

CONCRETE MONUMENT WITH LEAD AND TACK IN CENTERLINE OF 43RD AVE. 18.5' N OF NORTH END OF PAVEMENT UNDER CHAIN LINK GATE
ELEV=128.48
STA 51+09.32, 299.90' LT.

TBM #2:

SET 1" IRON PIPE W/RED CAP MKD "H&AI CONTROL". 1' W OF W EDGE OF N-S GRAVEL PATH, APPROX. 350' N TBM #1.
ELEV=130.27
STA 53+22.78, 27.20' LT.

TBM #3:

SET REBAR W/RED CAP MKD "H&AI CONTROL". 6.5' SW OF CENTER OF EXISTING TRAIL, 28.3' FROM 18" FIR, 29.2' FROM 10" FIR, AND APPROX. 675' NW OF TBM#1.
ELEV=128.74
STA 59+95.83, 26.35' LT.

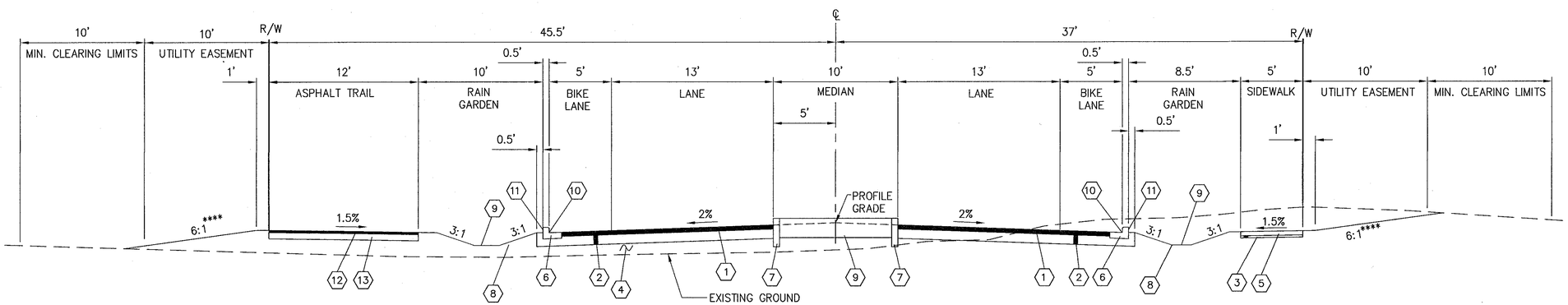

AIRPORT BOULEVARD ROADWAY SECTION B

N.T.S.

STA 75+50 TO STA 77+00
STA 79+00 TO STA 80+42

**** STA 75+50 TO STA 77+00, LT & RT: SEE ROADWAY SECTION A FOR DIMENSIONS AND SLOPES BEYOND TRAIL/SIDEWALK

STA 79+00 TO STA 80+42, LT & RT = 6:1

PLAN LEGEND

EXISTING		PROPOSED
●	FOUND REBAR AS NOTED	
◐	BENCH MARK	
△	TEMPORARY BENCH MARK	
	SUPPORT POLE	
	GATE POST	
W	WATER VALVE	
	SIGN POST	
S	SEWER MANHOLE	
	POWER POLE	
	GUY ANCHOR	
	BLOWOFF	
	FIRE HYDRANT	FH
•	BOLLARD	
	WATER METER	
—X—X—	FENCE LINE	—X—X—X—X—
—G—	GAS LINE	—— G ——
—P—	POWER LINE	
—UP—	POWER LINE (UNDERGROUND)	
—SS—	SEWER LINE	—— SS ——
	SIDE SEWER	—— SS ——
—SD—	STORM DRAIN LINE	
—T—	TELEPHONE LINE	
—UT—	TELEPHONE LINE (UNDERGROUND)	
—W—	WATER LINE	—— W ——
—SSFM—	SANITARY SEWER FORCE MAIN	
	CONSTRUCTION CENTERLINE	—— – ——
	CURB AND GUTTER	
	SIDEWALK	

PLAN CHECK	BY	DATE

DATE	NO.	REVISION	BY

DESIGNED BY: BJH & DLM
DRAWN BY: MPN

BRYAN J. HUSCHKA — STATE OF WASHINGTON — REGISTERED PROFESSIONAL ENGINEER — 4-26-13

APPROVED FOR CONSTRUCTION
JAMES KELLY, PE
PUBLIC WORKS DIRECTOR
05-16-13
DATE APPROVED:

CITY OF ARLINGTON

AECOM
710 2nd Ave, Suite 1000
Seattle, Wa 98104
T 206.624.9349
WWW.AECOM.COM

CITY OF ARLINGTON
AIRPORT BOULEVARD ROAD IMPROVEMENTS
ROADWAY SECTIONS AND LEGEND

REFERENCE SHEET NO. RS1

SHEET 2 OF 25 SHEETS

Plotted: Apr 26, 2013 - 8:39am randalim P:\Water\60283126 - Airport Blvd Phase 2 Design\CADD\Civil\Sheet\112736-RS1.dwg Layout Name: LAYOUT
Last Saved By: huschkab Apr 25, 2013 - 3:41pm

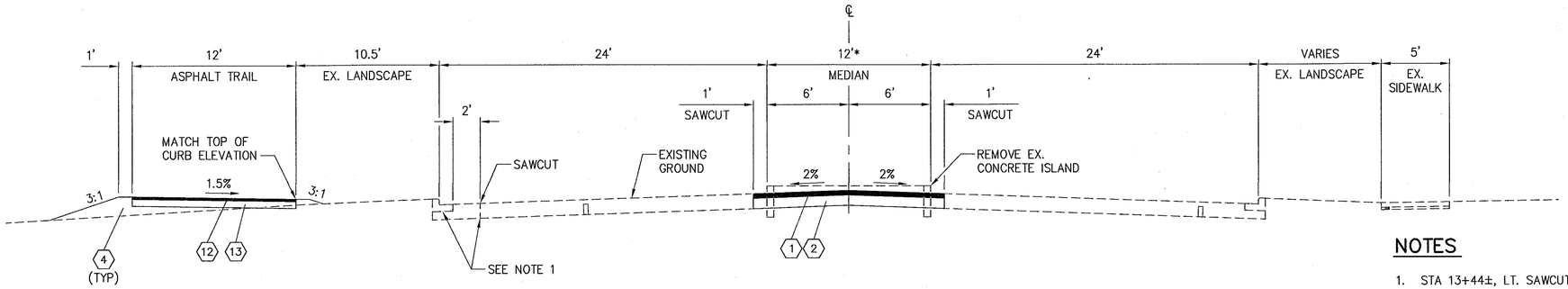

AIRPORT BOULEVARD ROADWAY SECTION C

N.T.S.

STA 10+60 TO 16+11.69
STA 17+46.35 TO 20+00

* REMOVE EXISTING ISLAND FROM STA 14+62.75 TO 15+95.56.

ROADWAY SECTION LEGEND

1. 0.33' HMA CL. 1/2 IN. PG 64-22 (2 LIFTS)
2. 0.75' CRUSHED SURFACING BASE COURSE
3. 0.17' CRUSHED SURFACING TOP COURSE
4. SELECT EXCAVATED MATERIAL
5. CEMENT CONC. SIDEWALK – 4" DEPTH. SEE WSDOT STANDARD PLAN F-30.10-01
6. CEMENT CONC. TRAFFIC CURB AND GUTTER. SEE WSDOT STANDARD PLAN F-10.12-02
7. CEMENT CONC. TRAFFIC CURB. SEE WSDOT STANDARD PLAN F-10.12-02
8. RAIN GARDEN, SEE DETAIL ON THIS SHEET.
9. SEE LANDSCAPING PLAN.
11. BACK OF CURB TO BE FINISHED.
12. 0.17 HMA CL 1/2 IN, PG 64-22.
13. 0.50' CRUSHED SURFACING BASE COURSE.

NOTES

1. STA 13+44±, LT. SAWCUT 2' FROM EDGE OF EXISTING LIP OF GUTTER OR THROUGH EXISTING INTERSECTION TO BE REMOVED AT 28' LT. INSTALL NEW CEMENT CONCRETE TRAFFIC CURB AND GUTTER PER WSDOT STANDARD PLAN F-10.12-00 EXCEPT GUTTER IS 1.5' WIDE INSTEAD OF 1'. USE SAME PAVEMENT SECTION AS SHOWN IN TYPICAL ROADWAY SECTION C. MATCH EXISTING ELEVATIONS.

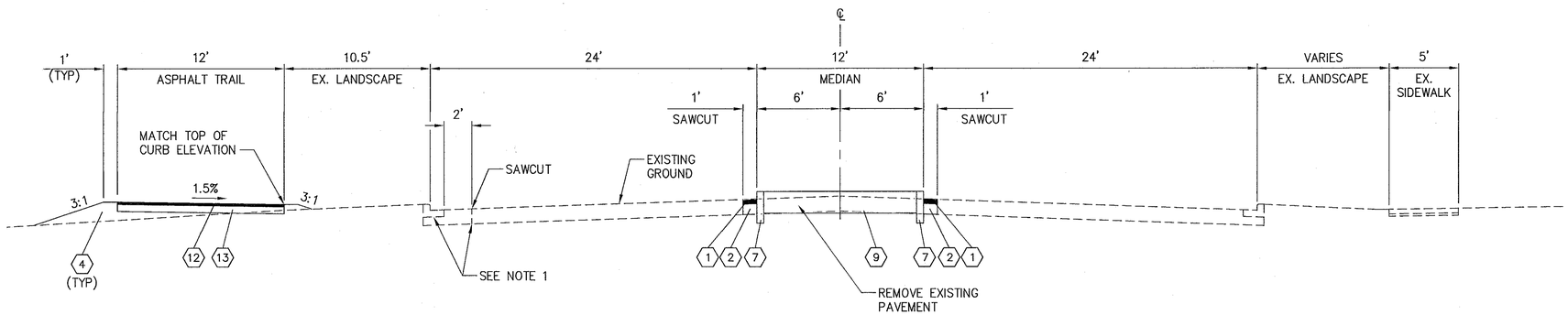

AIRPORT BOULEVARD ROADWAY SECTION D

N.T.S.

STA 16+11.69 TO 17+46.35

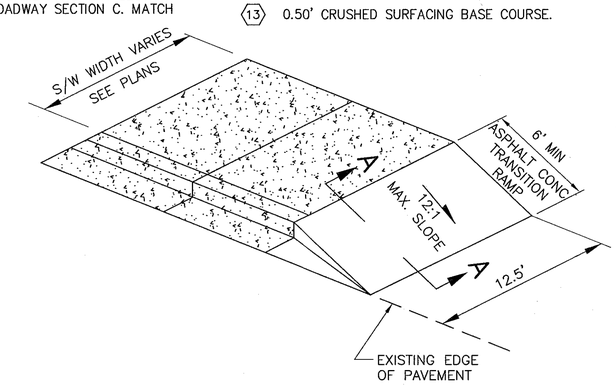

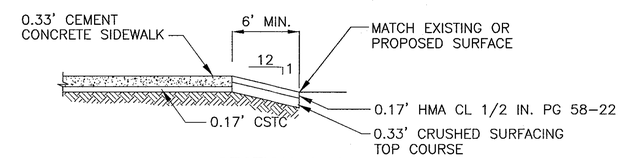

SECTION A-A

ASPHALT RAMP DETAIL

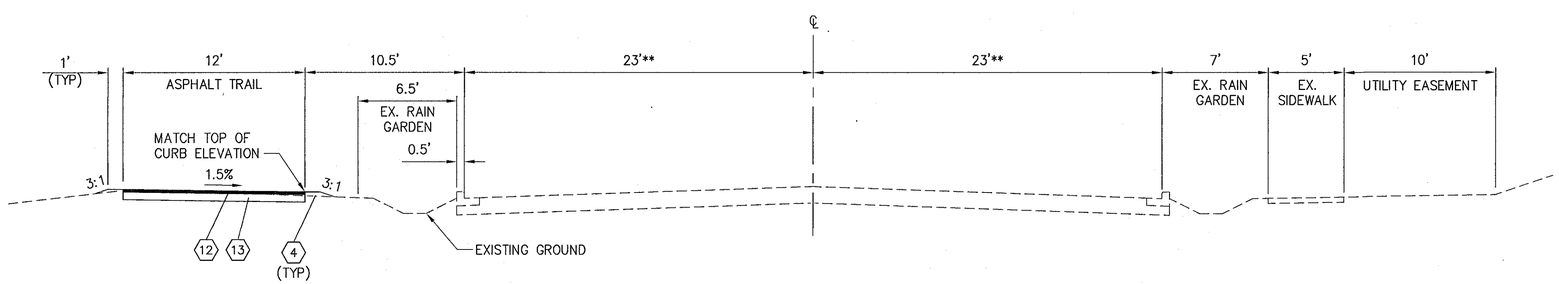

AIRPORT BOULEVARD ROADWAY SECTION E

N.T.S.

STA 20+00 TO STA 53+83.25

** STA 20+00 TO 22+00 WIDTH VARIES FROM 30' TO 23'.

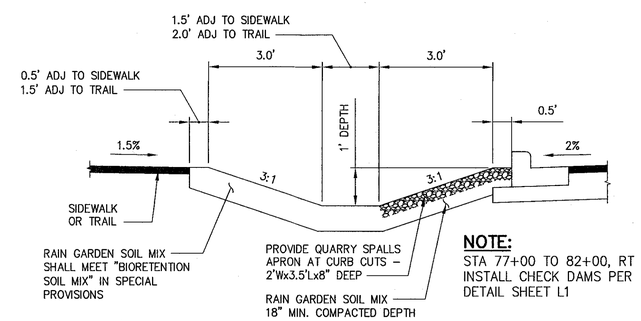

NOTE:
STA 77+00 TO 82+00, RT INSTALL CHECK DAMS PER DETAIL SHEET L1

RAIN GARDEN DETAIL

PLAN CHECK	BY	DATE

DATE	NO.	REVISION	BY

DESIGNED BY: BJH & DLM
DRAWN BY: MPN

BRIAN J. HUSCHKA — STATE OF WASHINGTON — 36269 — REGISTERED PROFESSIONAL ENGINEER — 4-26-13

APPROVED FOR CONSTRUCTION
JAMES KELLY, PE
PUBLIC WORKS DIRECTOR
05-16-13
DATE APPROVED:

CITY OF ARLINGTON

AECOM
710 2nd Ave, Suite 1000
Seattle, Wa 98104
T 206.624.9349
WWW.AECOM.COM

CITY OF ARLINGTON
AIRPORT BOULEVARD ROAD IMPROVEMENTS
ROADWAY SECTIONS

REFERENCE SHEET NO. RS2

SHEET 3 OF 25 SHEETS

Plotted: Apr 26, 2013 - 8:40am randallm P:\Water\60283126 - Airport Blvd Phase 2 Design\CADD\Civil\Sheet\112736-RS2.dwg Layout Name: LAYOUT
Last Saved By: huschkab Apr 22, 2013 - 9:06am

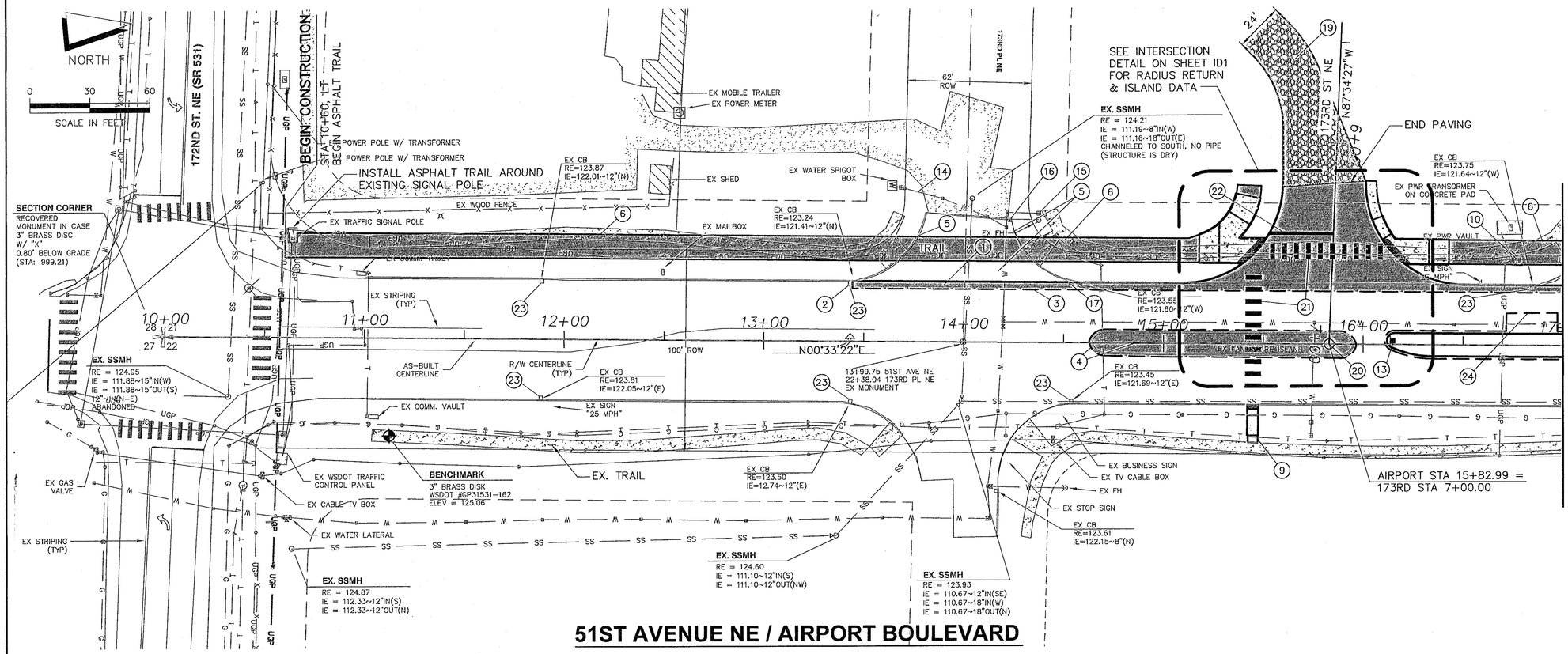

51ST AVENUE NE / AIRPORT BOULEVARD

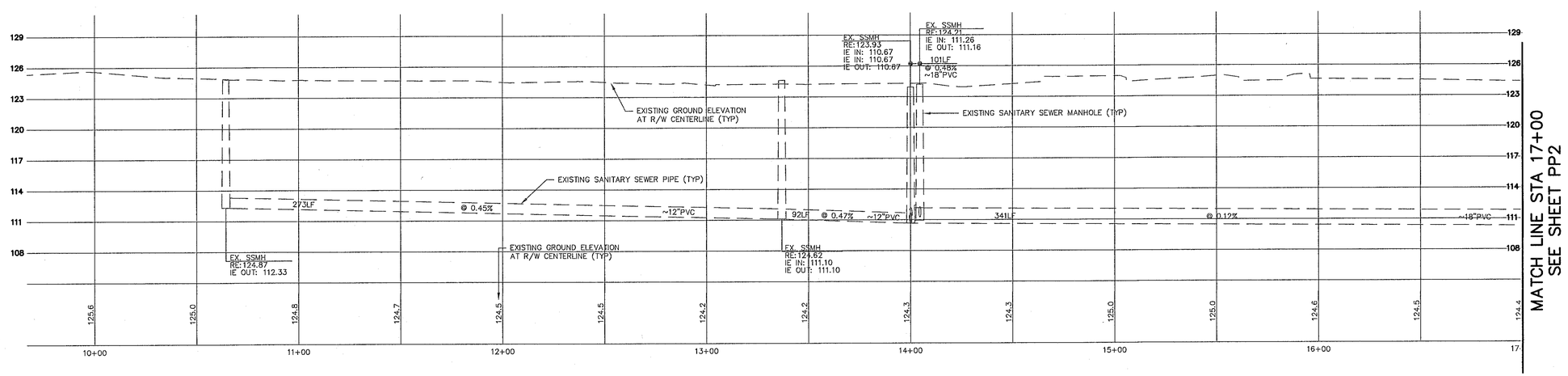

CONSTRUCTION NOTES

1. SAWCUT EXISTING PAVEMENT 2' FROM EDGE OF PROPOSED GUTTER – STA 13+45± TO STA 17+00.
2. PROTECT EXISTING CATCH BASIN IN PLACE.
3. INSTALL CEMENT CONC. TRAFFIC CURB AND GUTTER PER WSDOT STANDARD PLAN F-10.12-02, 24" WIDTH (MATCH EXISTING)
4. STA 14+52 TO STA 15+96. REMOVE CONCRETE CURB & LANDSCAPING. SAWCUT 1' FROM FACE OF CURB & REMOVE PAVEMENT. SEE ROADWAY SECTION C. SEE LANDSCAPE PLAN LP1.
5. REMOVE EXISTING ROAD STUB-OUT IMPROVEMENTS INCLUDING ASPHALT ROADWAY, CURB AND GUTTER AND CURB RAMPS. RESTORE AREA USING SELECT EXCAVATED MATERIAL AS DIRECTED BY THE ENGINEER.
6. REMOVE EXISTING CEMENT CONCRETE SIDEWALK.
9. STA 15+45.0, RT INSTALL PERPENDICULAR CURB RAMP TYPE B PER WSDOT STANDARD PLAN F-40.15-01. RAMP WIDTH = 5'. REMOVE AND REPLACE IN KIND 5 LF OF CURB AND GUTTER.
10. ADJUST POWER VAULT TO GRADE (BY OTHERS).
13. INSTALL R4-7 SIGN, SEE SHEET CH1 FOR LOCATION & DETAILS.
14. UPGRADE 2" SERVICE LINE FROM THE EXISTING CORP. STOP AT THE MAIN LINE TO THE METER PER ARLINGTON STANDARD DETAIL W-050 AND SET TO GRADE.
15. REMOVE EXISTING WATER SERVICE AND CORP. STOP AND PLUG AT THE SADDLE ON THE MAIN.
16. ADJUST VALVE BOX TO GRADE AND INSTALL CONCRETE PAD PER CITY OF ARLINGTON STANDARD DETAIL NUMBER W-190. TYP-ALL VALVE BOXES OUTSIDE OF PAVEMENT.
17. REMOVE AND REPLACE EXISTING CATCH BASIN WITH TYPE 1 CB PER ARLINGTON STND. DETAIL SD-020. PLACE AT NEW CURB LOCATION. MATCH EXISTING GRADES AND RE-CONNECT EXISTING 12" STORM DRAIN TO WEST.
19. INSTALL 300± LF OF GRAVEL ROAD. LOCATION TO BE DETERMINED BY ENGINEER. GRAVEL ROAD SHALL CONSIST OF 6" CSBC OVER COMPACTED SUBGRADE.
20. INSTALL MONUMENT CASE AND COVER PER CITY STANDARD DETAIL R-130, STA 15+82.99, 0' LT.
21. INSTALL PLASTIC CROSSWALK LINE PER WSDOT STANDARD PLAN M-15.10-01
22. INSTALL 24" PLASTIC STOP LINE. 173RD STA 6+45.5, 0' TO 30.5' RT.
23. INSTALL INLET PROTECTION PER WSDOT STANDARD PLAN I-40.20-00.
24. SAWCUT AND REMOVE PAVEMENT TO INSTALL WATER SERVICE TO ISLAND, SEE SHEET LP1 FOR EXACT LOCATION.

NOTE
INFORMATION CONTAINED ON THESE PLANS IS BASED ON DESIGN DRAWINGS AND MAY NOT REFLECT ACTUAL FIELD CONDITIONS.

CALL TWO BUSINESS DAYS BEFORE YOU DIG - CALL 811

PLAN CHECK	BY	DATE

DATE	NO.	REVISION	BY

DESIGNED BY: BJH
DRAWN BY: MPN

HANAN J. HUSSEINI — STATE OF WASHINGTON — REGISTERED PROFESSIONAL ENGINEER — 4-26-13

APPROVED FOR CONSTRUCTION
JAMES KELLY, PE
PUBLIC WORKS DIRECTOR
05-16-13
DATE APPROVED:

CITY OF ARLINGTON

AECOM
710 2nd Ave, Suite 1000
Seattle, Wa 98104
T 206.624.9349
WWW.AECOM.COM

CITY OF ARLINGTON
AIRPORT BOULEVARD ROAD IMPROVEMENTS
PLAN AND PROFILE
STA 10+00 TO STA 17+00

REFERENCE SHEET NO. PP1

SHEET 4 OF 25 SHEETS

Plotted: Apr 26, 2013 - 8:43am randallm P:\Water\60283126 - Airport Blvd Phase 2 Design\CADD\Civil\Sheet\112736-PP1_PP6.DWG Layout Name: PP1 RD PLAN PROFILE AIR BLVD
Last Saved By: huschkab Apr 26, 2013 - 4:13am

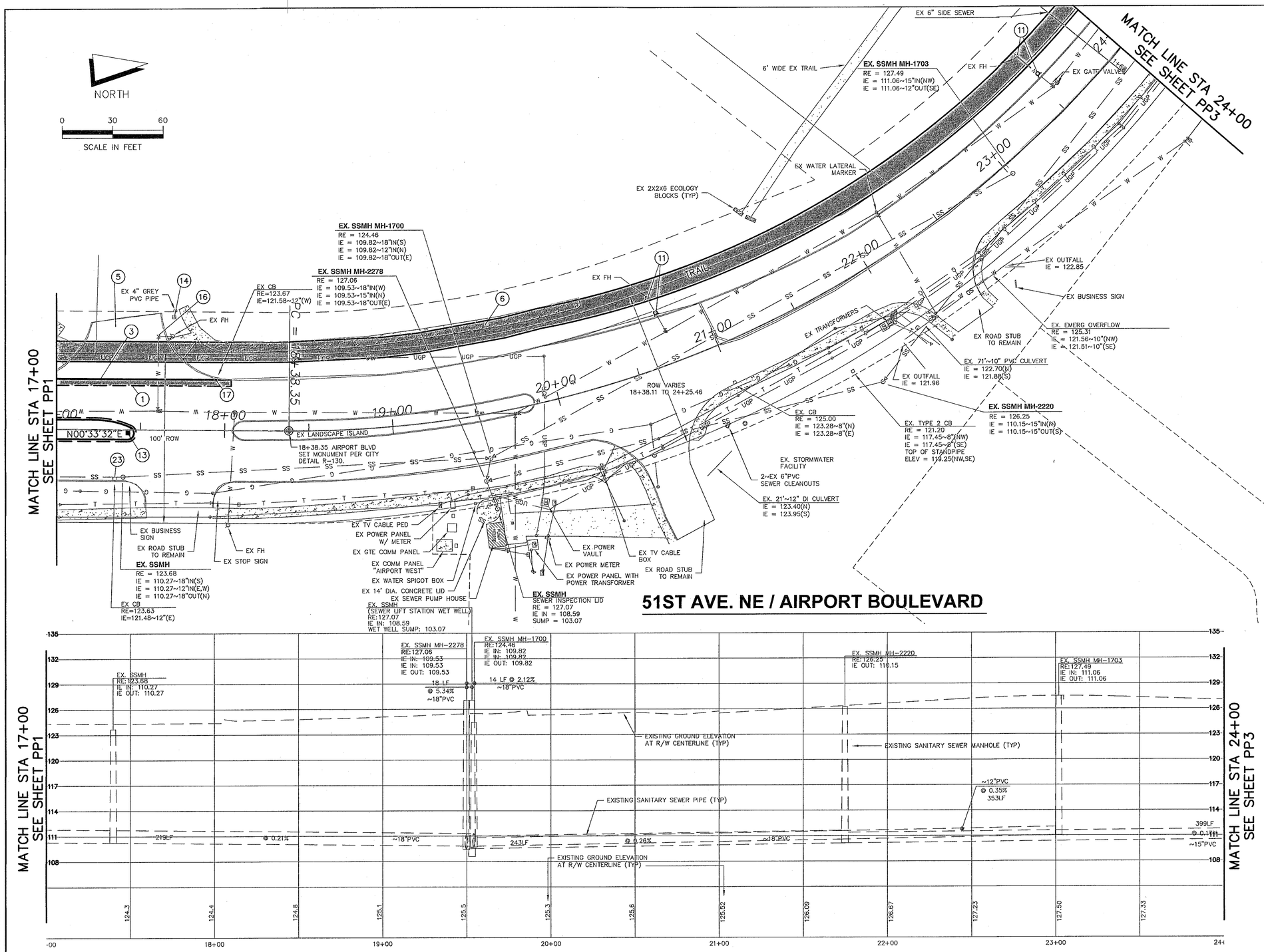

CONSTRUCTION NOTES

1. SAWCUT EXISTING PAVEMENT 2' FROM EDGE OF PROPOSED GUTTER – STA 17+00 TO STA 18+05.
2. PROTECT EXISTING CATCH BASIN IN PLACE.
3. INSTALL CEMENT CONC. TRAFFIC CURB AND GUTTER PER WSDOT STANDARD PLAN F-10.12-02, 24" WIDTH (MATCH EXISTING)
5. REMOVE EXISTING ROAD STUB-OUT IMPROVEMENTS INCLUDING ASPHALT ROADWAY, CURB AND GUTTER AND CURB RAMPS. RESTORE AREA USING SELECT EXCAVATED MATERIAL AS DIRECTED BY THE ENGINEER.
6. REMOVE EXISTING CEMENT CONCRETE SIDEWALK.
11. RELOCATE FIRE HYDRANT 3' BEHIND FACE OF CURB PER CITY OF ARLINGTON STANDARD DETAIL W-010. DO NOT INSTALL CONCRETE PAD.
13. INSTALL R4-7 SIGN, SEE SHEET CH1 FOR LOCATION & DETAILS.
14. UPGRADE 2" SERVICE LINE FROM THE EXISTING CORP. STOP AT THE MAIN LINE TO THE METER PER ARLINGTON STANDARD DETAIL W-050 AND SET TO GRADE.
16. ADJUST VALVE BOX TO GRADE AND INSTALL CONCRETE PAD PER CITY OF ARLINGTON STANDARD DETAIL NUMBER W-190. TYP-ALL VALVE BOXES LOCATED OUTSIDE OF PAVEMENT.
17. REMOVE AND REPLACE EXISTING CATCH BASIN WITH TYPE 1 CB PER ARLINGTON STANDARD DETAIL SD-020. PLACE AT NEW CURB LOCATION. MATCH EXISTING GRADES AND RE-CONNECT EXISTING 12" STORM DRAIN TO WEST.
23. INSTALL INLET PROTECTION PER WSDOT STANDARD PLAN I-40.20-00.

CURVE TABLE

NUMBER	DELTA ANGLE	TANGENT	RADIUS	ARC LENGTH
R1 *	52°26'15"	316.05'	641.76'	587.34'

*NOTE:
PI STA 21+54.40
N 424,210.609
E 1,316,219.506

NOTE
INFORMATION CONTAINED ON THESE PLANS IS BASED ON DESIGN DRAWINGS AND MAY NOT REFLECT ACTUAL FIELD CONDITIONS.

CALL TWO BUSINESS DAYS BEFORE YOU DIG - CALL 811

PLAN CHECK	BY	DATE

DATE	NO.	REVISION	BY

DESIGNED BY: BJH
DRAWN BY: MPN

BRYAN J. HUSCHKA — STATE OF WASHINGTON — 36400 — REGISTERED PROFESSIONAL ENGINEER — 4-26-13

APPROVED FOR CONSTRUCTION
JAMES KELLY, PE
PUBLIC WORKS DIRECTOR
05-16-13
DATE APPROVED:

CITY OF ARLINGTON

AECOM
710 2nd Ave, Suite 1000
Seattle, Wa 98104
T 206.624.9349
WWW.AECOM.COM

CITY OF ARLINGTON
AIRPORT BOULEVARD ROAD IMPROVEMENTS
PLAN AND PROFILE
STA 17+00 TO STA 24+00

REFERENCE SHEET NO. PP2

SHEET 5 OF 25 SHEETS

Plotted: Apr 26, 2013 - 8:43am randallm P:\Water\60283126 - Airport Blvd Phase 2 Design\CADD\Civil\Sheet\112736-PP1_PP6.DWG Layout Name: PP2 RD PLAN PROFILE AIR BLVD
Last Saved By: huschkab Apr 26, 2013 - 4:13am

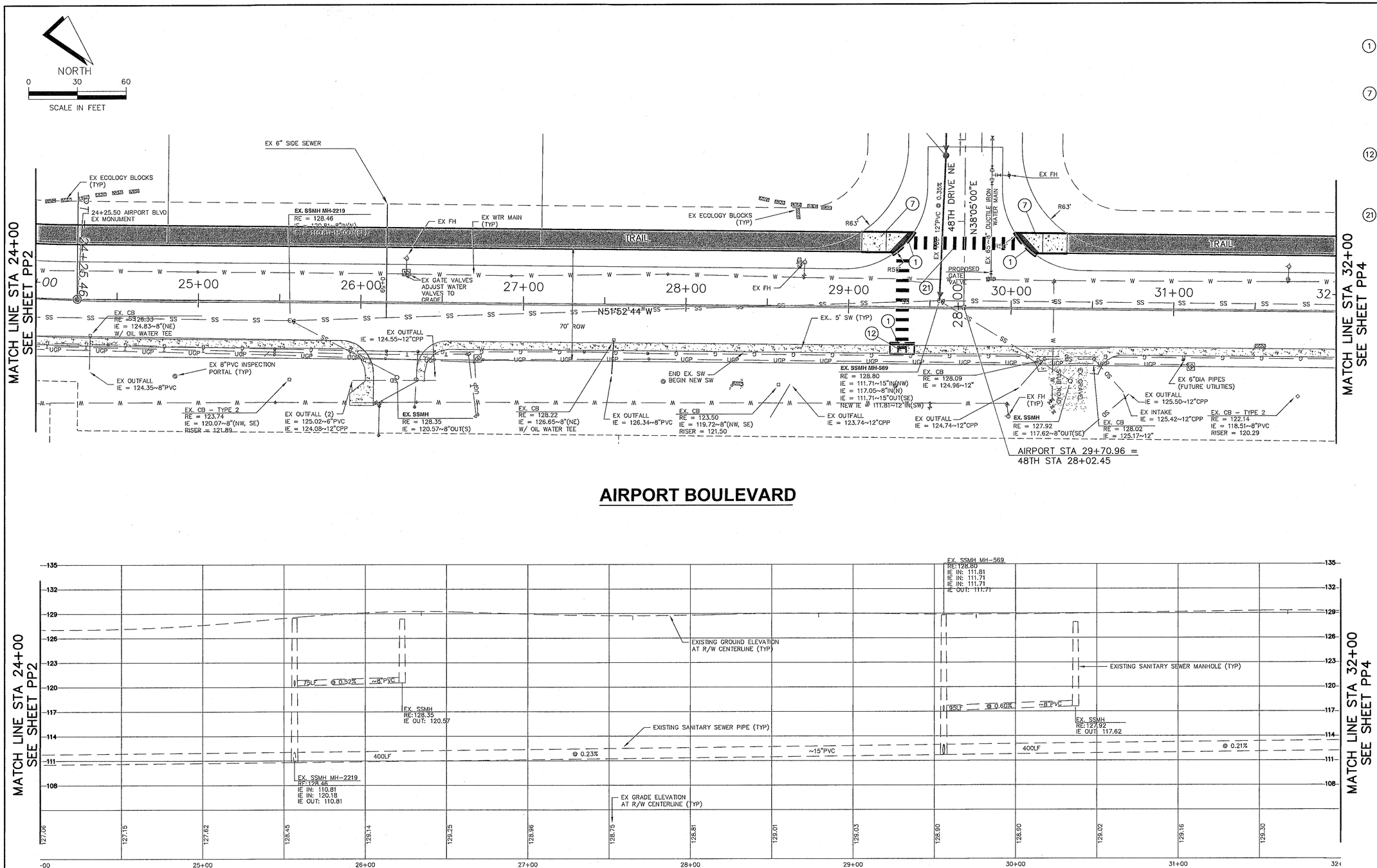

AIRPORT BOULEVARD

CONSTRUCTION NOTES

1. SAWCUT EXISTING PAVEMENT ALONG FACE OF PROPOSED GUTTER FOR CURB RAMP. SAWCUT & REMOVE EXISTING CURB & GUTTER.
7. INSTALL SINGLE DIRECTION CURB RAMP TYPE A PER WSDOT STANDARD PLAN F-40.16-01. RAMP WIDTH 12' & RAMP LENGTH 10'
   48TH STA 27+63.5, LT & RT
12. AIRPORT STA 29+13.7, RT INSTALL PARALLEL CURB RAMP TYPE A PER WSDOT STANDARD PLAN F-40.12-01. RAMP WIDTH 5' AND RAMP LENGTH 10'
21. INSTALL PLASTIC CROSSWALK LINE PER WSDOT STANDARD PLAN M-15.10-01.

NOTE
INFORMATION CONTAINED ON THESE PLANS IS BASED ON DESIGN DRAWINGS AND MAY NOT REFLECT ACTUAL FIELD CONDITIONS.

CALL TWO BUSINESS DAYS BEFORE YOU DIG - CALL 811

PLAN CHECK	BY	DATE

DATE	NO.	REVISION	BY

DESIGNED BY: BJH
DRAWN BY: MPN

BRYAN J. HUSCHKA — STATE OF WASHINGTON — 38481 — REGISTERED PROFESSIONAL ENGINEER — 4-26-13

APPROVED FOR CONSTRUCTION
JAMES KELLY, PE
PUBLIC WORKS DIRECTOR
05-16-13
DATE APPROVED:

CITY OF ARLINGTON

AECOM
710 2nd Ave, Suite 1000
Seattle, Wa 98104
T 206.624.9349
WWW.AECOM.COM

CITY OF ARLINGTON
PLAN AND PROFILE
PLAN & PROFILE
STA 24+00 TO STA 32+00

REFERENCE SHEET NO. PP3

SHEET 6 OF 25 SHEETS

Plotted: Apr 26, 2013 - 8:44am randallm P:\Water\60283126 - Airport Blvd Phase 2 Design\CADD\Civil\Sheet\112736-PP1_PP6.DWG Layout Name: PP3 RD PLAN PROFILE AIR BLVD
Last Saved By: huschkab Apr 26, 2013 - 4:13am

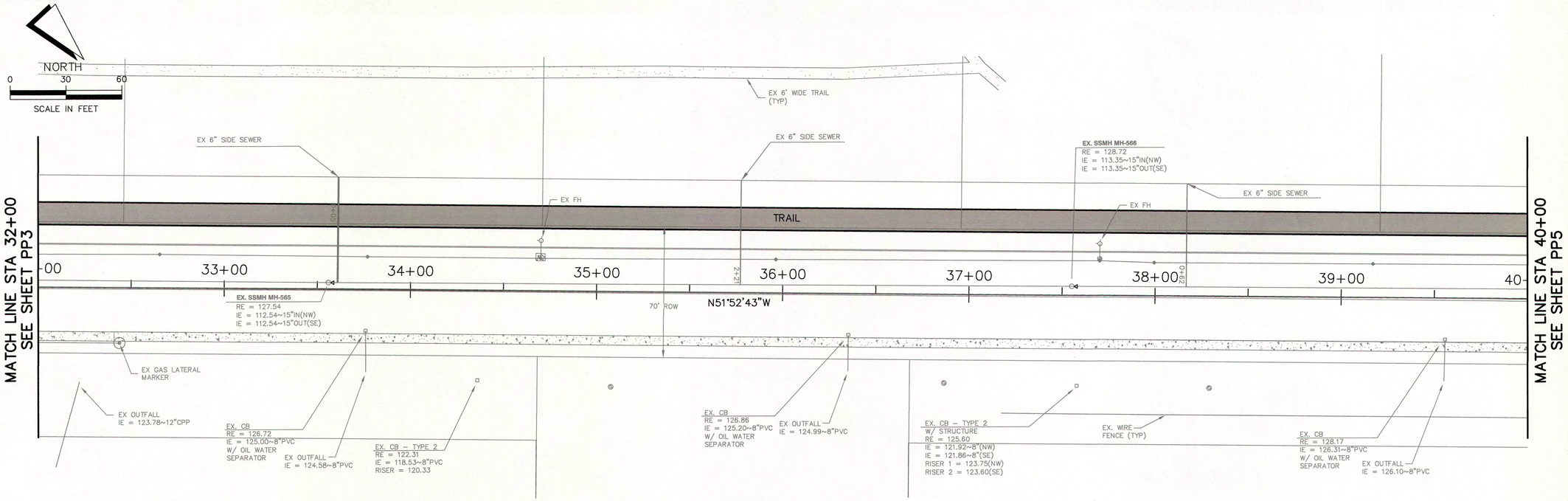

AIRPORT BOULEVARD

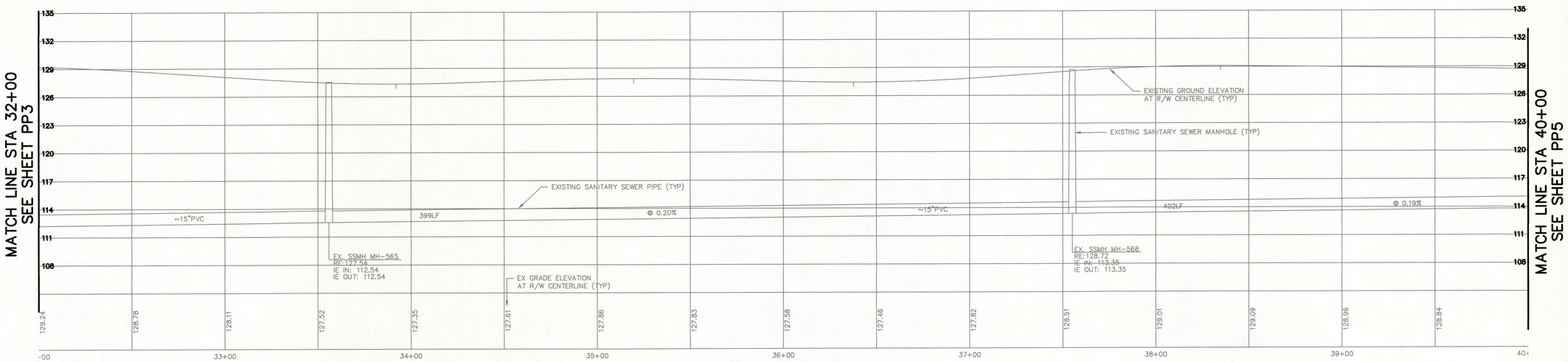

NOTE
INFORMATION CONTAINED ON THESE PLANS IS BASED ON DESIGN DRAWINGS AND MAY NOT REFLECT ACTUAL FIELD CONDITIONS.

CALL TWO BUSINESS DAYS BEFORE YOU DIG - CALL 811

PLAN CHECK	BY	DATE

DATE	NO.	REVISION	BY

DESIGNED BY: BJH
DRAWN BY: MPN

BRYAN J. HUSCH — STATE OF WASHINGTON — 38666 — REGISTERED PROFESSIONAL ENGINEER — 4-26-13

APPROVED FOR CONSTRUCTION
JAMES KELLY, PE
PUBLIC WORKS DIRECTOR
05-16-13
DATE APPROVED:

CITY OF ARLINGTON

AECOM
710 2nd Ave, Suite 1000
Seattle, Wa 98104
T 206.624.9349
WWW.AECOM.COM

CITY OF ARLINGTON
AIRPORT BOULEVARD ROAD IMPROVEMENTS
PLAN AND PROFILE
STA 32+00 TO STA 40+00

REFERENCE SHEET NO. PP4

SHEET 7 OF 25 SHEETS

Plotted: Apr 26, 2013 - 8:45am randallm P:\Water\60283126 - Airport Blvd Phase 2 Design\CADD\Civil\Sheet\112736-PP1_PP6.DWG Layout Name: PP4 RD PLAN PROFILE AIR BLVD
Last Saved By: huschkab Apr 26, 2013 - 4:13am

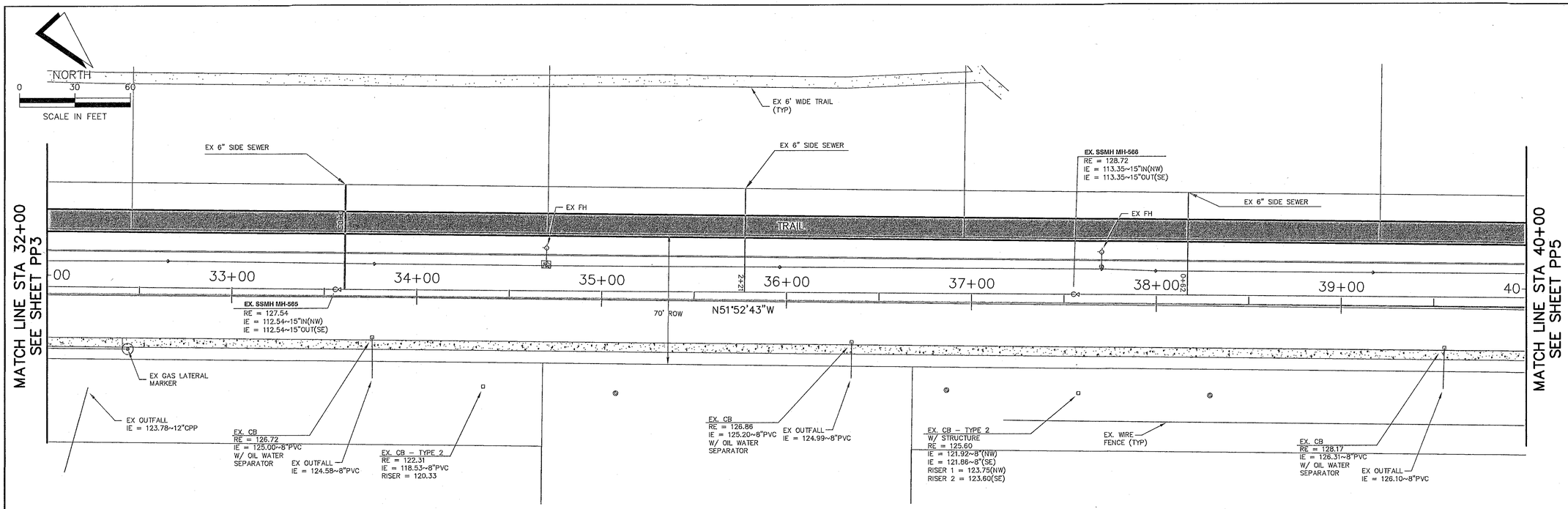

AIRPORT BOULEVARD

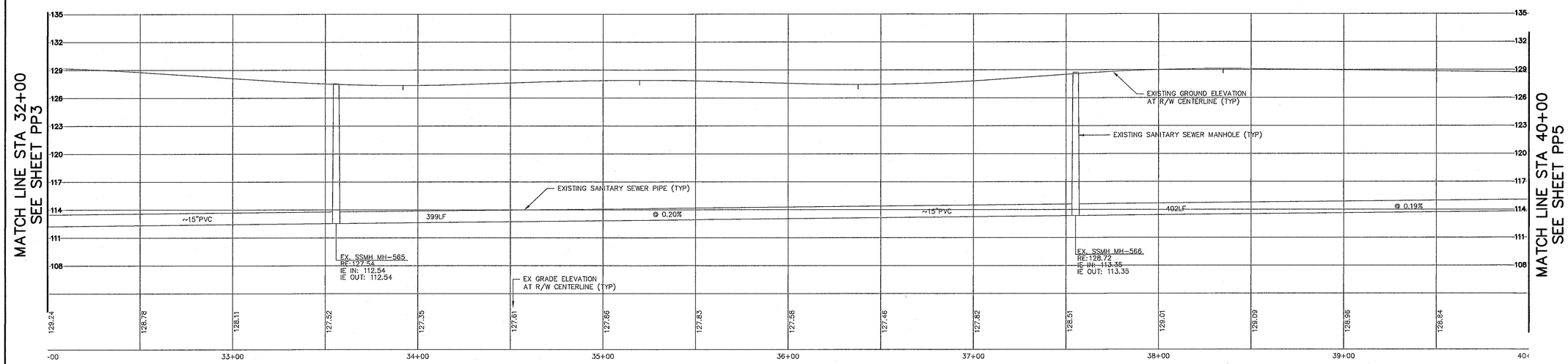

NOTE
INFORMATION CONTAINED ON THESE PLANS IS BASED ON DESIGN DRAWINGS AND MAY NOT REFLECT ACTUAL FIELD CONDITIONS.

CALL TWO BUSINESS DAYS BEFORE YOU DIG - CALL 811

PLAN CHECK	BY	DATE

DATE	NO.	REVISION	BY

DESIGNED BY: BJH
DRAWN BY: MPN

BRIAN J. HUSCH, STATE OF WASHINGTON, 036659, REGISTERED PROFESSIONAL ENGINEER, 4-26-13

APPROVED FOR CONSTRUCTION
JAMES KELLY, PE
PUBLIC WORKS DIRECTOR
05-16-13
DATE APPROVED:

CITY OF ARLINGTON

AECOM
710 2nd Ave, Suite 1000
Seattle, Wa 98104
T 206.624.9349
WWW.AECOM.COM

CITY OF ARLINGTON
AIRPORT BOULEVARD ROAD IMPROVEMENTS
PLAN AND PROFILE
STA 32+00 TO STA 40+00

REFERENCE SHEET NO. PP4

SHEET 7 OF 25 SHEETS

Plotted: Apr 26, 2013 - 8:45am randallm P:\Water\60283126 - Airport Blvd Phase 2 Design\CADD\Civil\Sheet\112736-PP1_PP6.DWG Layout Name: PP4 RD PLAN PROFILE AIR BLVD
Last Saved By: huschkab Apr 26, 2013 - 4:13am

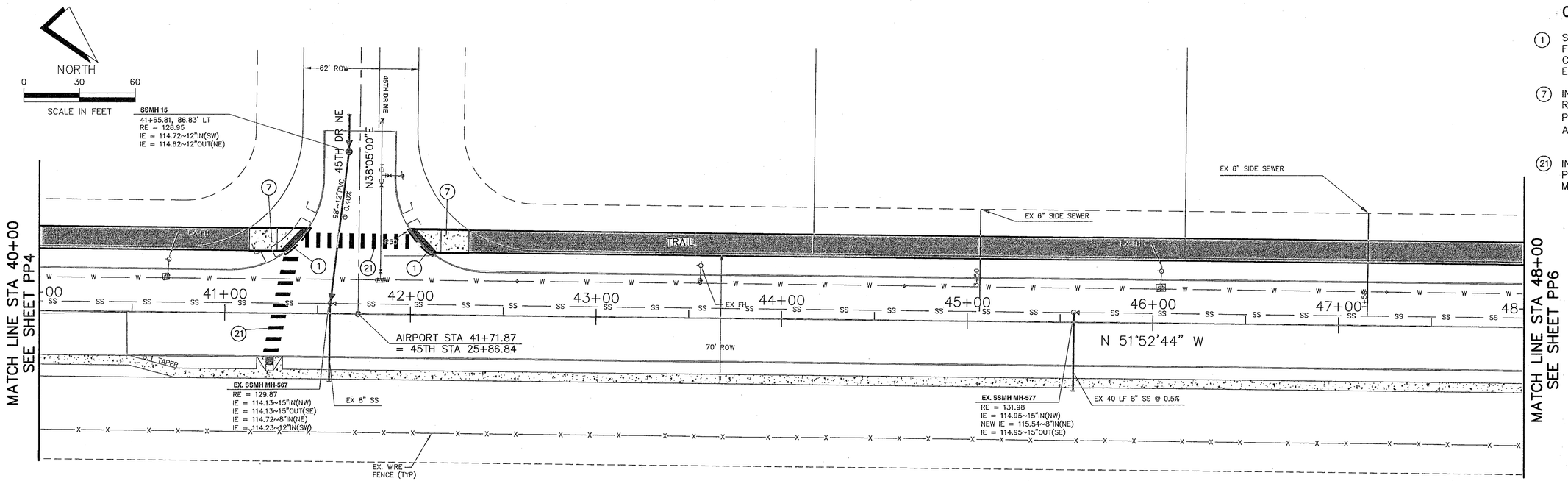

CONSTRUCTION NOTES

1. SAWCUT EXISTING PAVEMENT ALONG FACE OF PROPOSED GUTTER FOR CURB RAMP. SAWCUT & REMOVE EXISTING CURB & GUTTER.
7. INSTALL SINGLE DIRECTION CURB RAMP TYPE A PER WSDOT STANDARD PLAN F-40.16-01. RAMP WIDTH 12' AND RAMP LENGHT 10'.
   45TH STA 25+47.8, LT & RT
21. INSTALL PLASTIC CROSSWALK LINE PER WSDOT STANDARD PLAN M-15.10-01

AIRPORT BOULEVARD

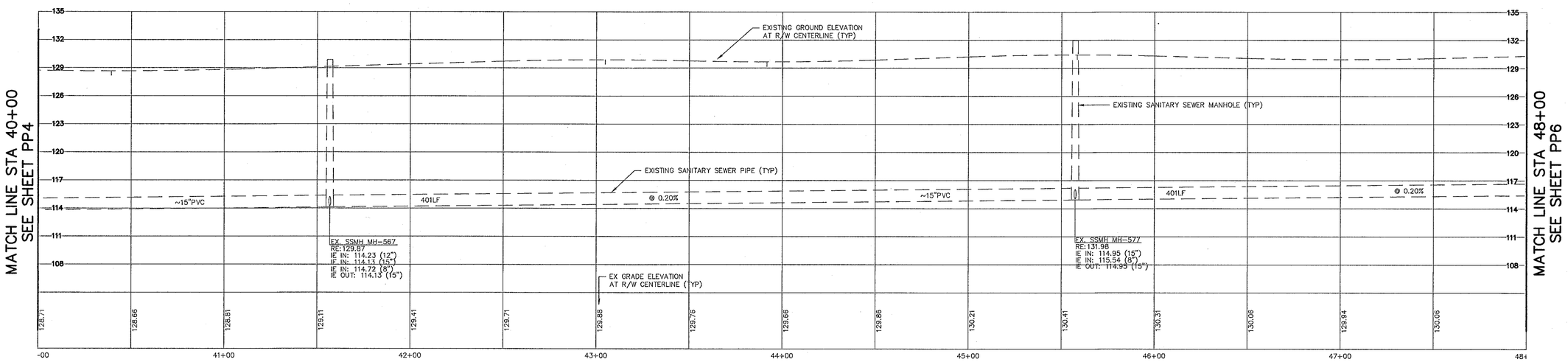

NOTE
INFORMATION CONTAINED ON THESE PLANS IS BASED ON DESIGN DRAWINGS AND MAY NOT REFLECT ACTUAL FIELD CONDITIONS.

CALL TWO BUSINESS DAYS BEFORE YOU DIG - CALL 811

PLAN CHECK	BY	DATE

DATE	NO.	REVISION	BY

DESIGNED BY: BJH
DRAWN BY: MPN

BRYAN J. HUSONK — STATE OF WASHINGTON — 38000 — REGISTERED PROFESSIONAL ENGINEER — 4-26-13

APPROVED FOR CONSTRUCTION
JAMES KELLY, PE
PUBLIC WORKS DIRECTOR
05-16-13
DATE APPROVED:

CITY OF ARLINGTON

AECOM
710 2nd Ave, Suite 1000
Seattle, Wa 98104
T 206.624.9349
WWW.AECOM.COM

CITY OF ARLINGTON
AIRPORT BOULEVARD ROAD IMPROVEMENTS
PLAN AND PROFILE
STA 40+00 TO STA 48+00

REFERENCE SHEET NO. PP5

SHEET 8 OF 25 SHEETS

Plotted: Apr 26, 2013 - 8:46am randallm P:\Water\60283126 - Airport Blvd Phase 2 Design\CADD\Civil\Sheet\112736-PP1_PP6.DWG Layout Name: PP5 RD PLAN PROFILE AIR BLVD
Last Saved By: huschbab Apr 26, 2013 - 4:13am

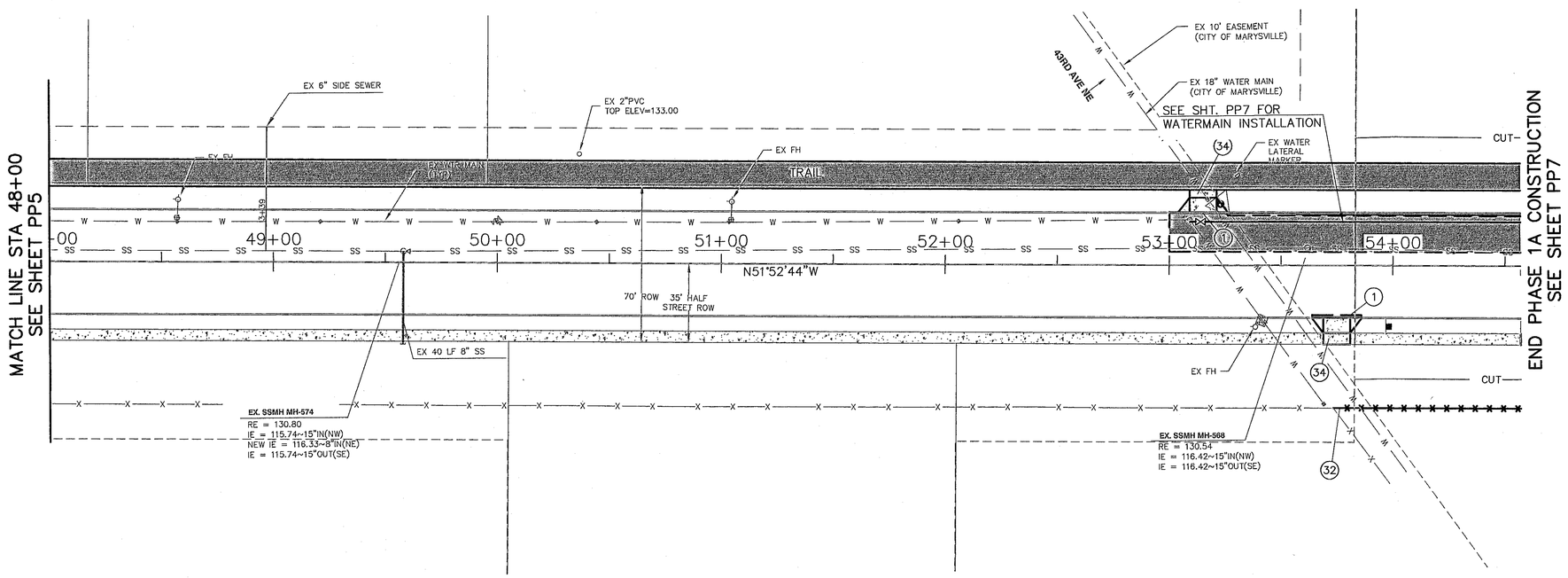

AIRPORT BOULEVARD

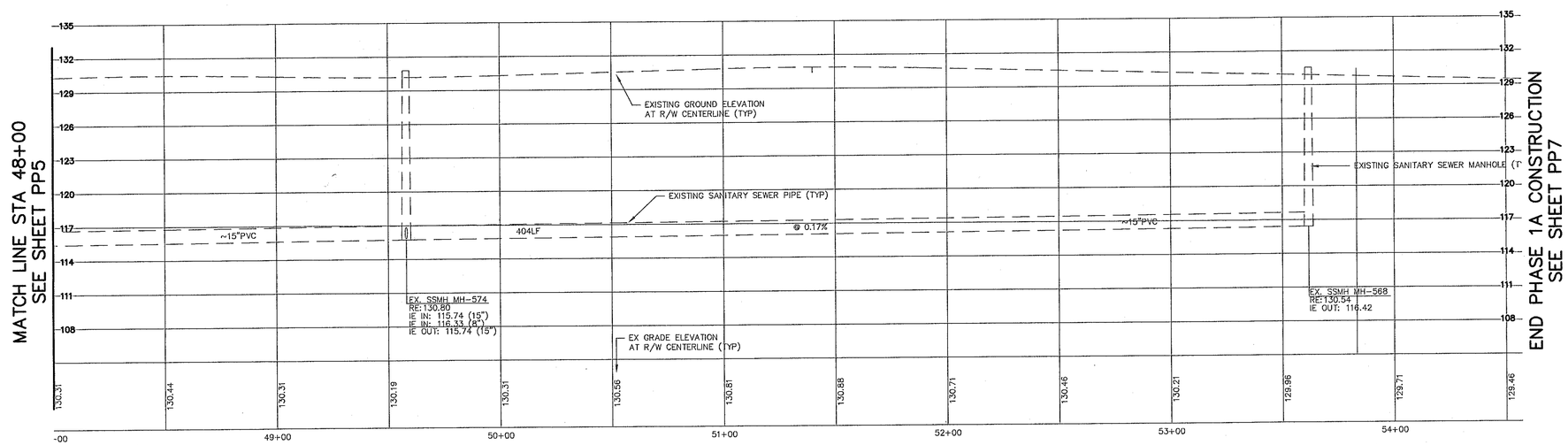

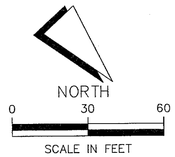

CONSTRUCTION NOTES

1. SAWCUT EXISTING PAVEMENT ALONG FACE OF PROPOSED GUTTER FOR DRIVEWAY. SAWCUT & REMOVE EXISTING CURB & GUTTER.

32. STA 53+75, RT., INSTALL 20 FOOT DOUBLE GATE PER WSDOT STANDARD PLAN L-30.10-01. REPLACE EXISTING CORNER POST WITH GATE POST AND CONNECT EXISTING WIRE FENCE.

34. INSTALL 12' DRIVEWAY PER WSDOT STANDARD PLAN F-80.10-02, TYPE 3.
    STA 53+15, LT.
    STA 53+55, RT.

NOTE
INFORMATION CONTAINED ON THESE PLANS IS BASED ON DESIGN DRAWINGS AND MAY NOT REFLECT ACTUAL FIELD CONDITIONS.

CALL TWO BUSINESS DAYS BEFORE YOU DIG - CALL 811

PLAN CHECK	BY	DATE

DATE	NO.	REVISION	BY

DESIGNED BY: BJH
DRAWN BY: MPN

BRIAN J. HUSCHKA — STATE OF WASHINGTON — REGISTERED PROFESSIONAL ENGINEER — 4-26-13

APPROVED FOR CONSTRUCTION
JAMES KELLY, PE
PUBLIC WORKS DIRECTOR
05-16-13
DATE APPROVED:

CITY OF ARLINGTON

AECOM
710 2nd Ave, Suite 1000
Seattle, Wa 98104
T 206.624.9349
WWW.AECOM.COM

CITY OF ARLINGTON
AIRPORT BOULEVARD ROAD IMPROVEMENTS
PLAN AND PROFILE
STA 48+00 TO STA 53+83.25

REFERENCE SHEET NO. PP6

SHEET 9 OF 25 SHEETS

Plotted: Apr 26, 2013 - 8:46am randallm P:\Water\60283126 - Airport Blvd Phase 2 Design\CADD\Civil\Sheet\112736-PP1_PP6.DWG Layout Name: PP6 RD PLAN PROFILE AIR BLVD
Last Saved By: huschkab Apr 26, 2013 - 4:13am

SEC 21 T31N R5E WM

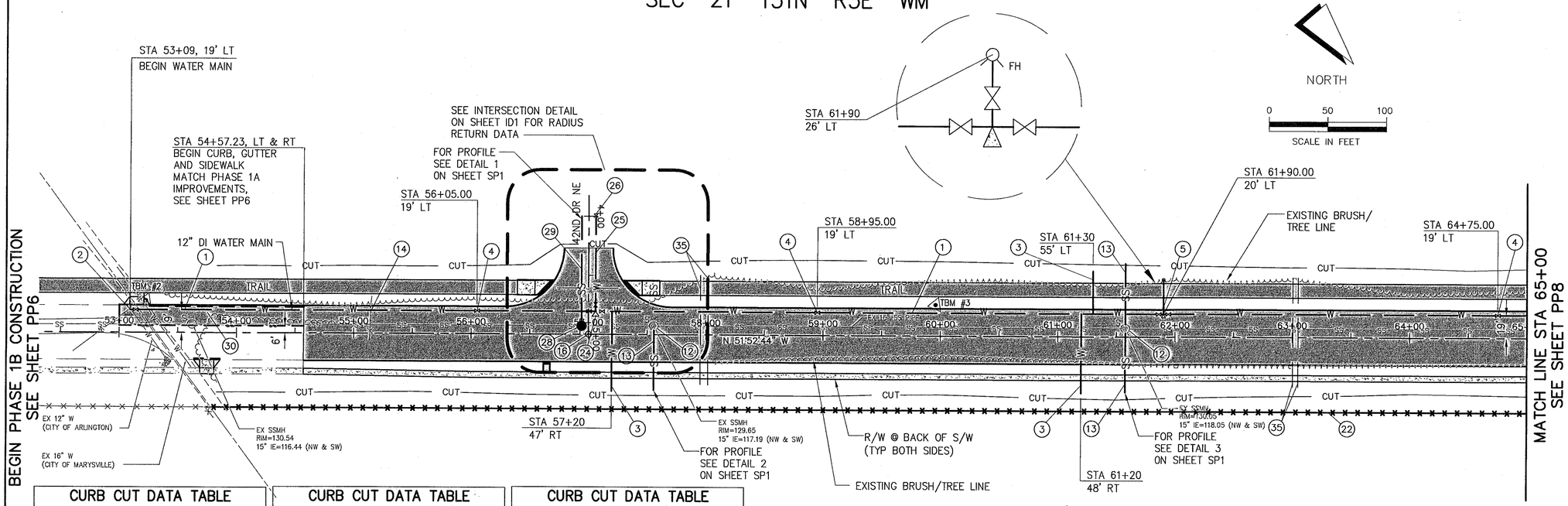

CURB CUT DATA TABLE	CURB CUT DATA TABLE	CURB CUT DATA TABLE
STA (LT & RT)	STA (LT & RT)	STA (LT & RT)
54+00	59+40	63+30
54+30	59+70	63+60
54+60	60+01.62	63+90
54+90	60+30	64+20
55+20	60+60	64+50
55+50	60+90	64+80
55+80	61+20	
56+10	61+50	
57+90	61+80	
58+20	62+10	
58+50	62+40	
58+80	62+70	
59+10	63+00	

AIRPORT BOULEVARD

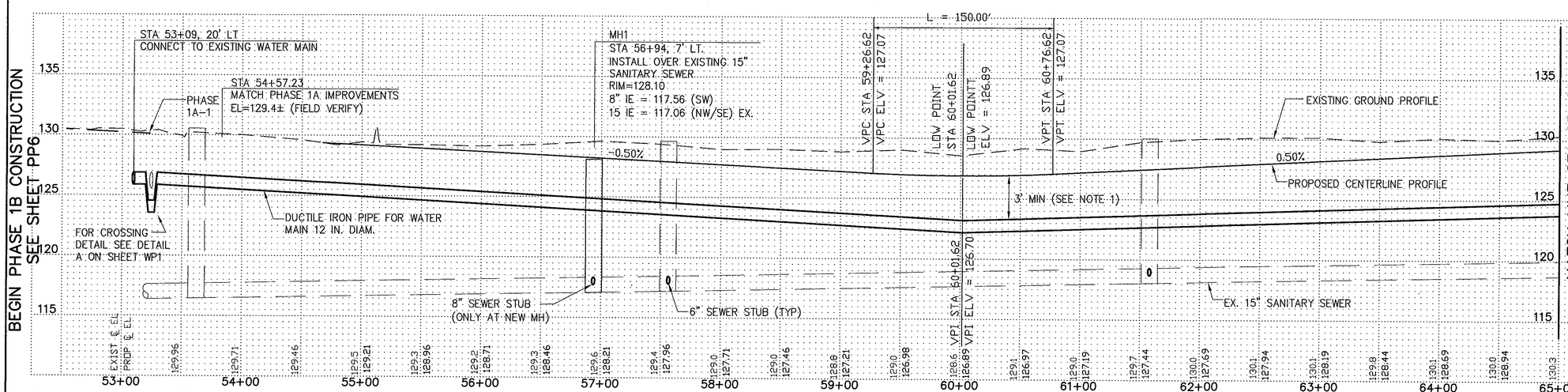

CONSTRUCTION NOTES

1. INSTALL DUCTILE IRON PIPE FOR WATER MAIN 12 IN. DIAM.
2. CONNECT 12" WATER MAIN TO EXISTING 12" WATER MAIN.SEE DETAIL 1, SHEET WP1.
3. INSTALL 2" WATER SERVICE PER CITY STANDARD DETAIL W-050. BURY METER BOX AND INSTALL MARKER POST.
4. INSTALL 12" GATE VALVE AND VALVE BOX PER CITY STANDARD DETAIL W-190.
5. INSTALL 12" FLANGED TEE WITH 2-12" GATE VALVES FLxMJ (NW & SE) 1-6" GATE VALVE FLxMJ AND VALVE BOX PER CITY STANDARD DETAIL W-190. INSTALL THRUST BLOCK PER CITY STANDARD DETAIL W-160. INSTALL FIRE HYDRANT ASSEMBLY PER CITY STANDARD DETAIL W-010 WITHOUT CONCRETE PAD AND FIRE HYDRANT MARKER PER CITY STANDARD DETAIL W-015.
12. ADJUST SANITARY SEWER MANHOLE TO GRADE. SEE SHEET SP1 FOR RIM ELEVATIONS.
13. INSTALL PVC SANITARY SEWER PIPE 6 IN. DIAM. CONNECT 6" SANITARY SEWER LINE TO EXISTING MANHOLE. INSTALL TEMPORARY PLUG AT END OF LINE AND PROVIDE SURFACE MARKER PER CITY STANDARD DETAIL SS-090. SEE SHEET SP1 FOR PROFILES.
14. STA 55+13.5, 32' LT. TO 6' RT. REMOVE 28 LF OF BARB WIRE FENCE AND RELOCATE 1 EA - CHAIN LINK GATE (10' WIDE BY 6' HIGH) TO STA 71+30, LT. AS DIRECTED BY THE ENGINEER.
16. INSTALL MONUMENT CASE AND COVER PER CITY STANDARD DETAIL R-130 STA 56+99.97.
22. STA 53+93.6 TO 65+00, 63.2' RT. INSTALL 6' HIGH CHAIN LINK FENCE TYPE 3 PER WSDOT STANDARD PLAN L-20.10-02. CONNECT TO NEW 20' DOUBLE GATE.
24. STA 57+06, 19' LT., INSTALL 1-12"x8" TEE FL X FL / 2-12" GATE VALVES FL X MJ AND 1-8" GATE VALVE FL X MJ WITH BLOCKING.
25. INSTALL DUCTILE IRON PIPE FOR WATER MAIN 8 IN DIA. 80 LF.
26. TEMP. CAP & BLOCK. INSTALL BLOW-OFF PER CITY OF ARLINGTON STD DETAIL W-180.
28. INSTALL TYPE 1-54"" MANHOLE.
29. INSTALL PVC SANITARY SEWER PIPE 8 IN DIA. CONNECT TO NEW MANHOLE PLUG AT END OF LINE AND PROVIDE SURFACE MARKER PER CITY STANDARD DETAIL SS-090. SEE SHEET SP1 FOR PROFILE.
30. SAWCUT ALONG EXISTING LANE STRIP. REMOVE EXISTING ASPHALT. PATCH PER CITY STANDARD DETAIL R-140. PROTECT EX. CURB IN PLACE.
35. CONTRACTOR SHALL INSTALL 2-2" PVC CONDUITS (TOTAL LENGTH 200 LF PER LOCATION) IN OPEN TRENCH PROVIDED BY OTHERS. BACKFILL SHALL BE PROVIDED BY OTHERS.

NOTES:

1. MAINTAIN 3' MINIMUM COVER UNDER ROADWAY.
2. BENDS TO BE FURNISHED WITH MECHANICAL RESTRAINED JOINTS PER CITY STANDARD 4-2.06.

PLAN CHECK	BY	DATE

DATE	NO.	REVISION	BY

DESIGNED BY: BJH & DLM
DRAWN BY: MPN

APPROVED FOR CONSTRUCTION
JAMES KELLY, PE
PUBLIC WORKS DIRECTOR
05-16-13
DATE APPROVED:

AECOM
710 2nd Ave, Suite 1000
Seattle, Wa 98104
T 206.624.9349
WWW.AECOM.COM

CITY OF ARLINGTON
AIRPORT BOULEVARD ROAD IMPROVEMENTS
PLAN AND PROFILE
STA 53+83.25 TO STA 65+00

REFERENCE SHEET NO. PP7
SHEET 10 OF 25 SHEETS

Plotted: Apr 26, 2013 - 8:47am randallm P:\Water\60283126 - Airport Blvd Phase 2 Design\CADD\Civil\Sheet\112736-PP7_PP9.dwg Layout Name: LAYOUT1
Last Saved By: huschkab Apr 26, 2013 - 7:23am

SEC 21 T31N R5E WM

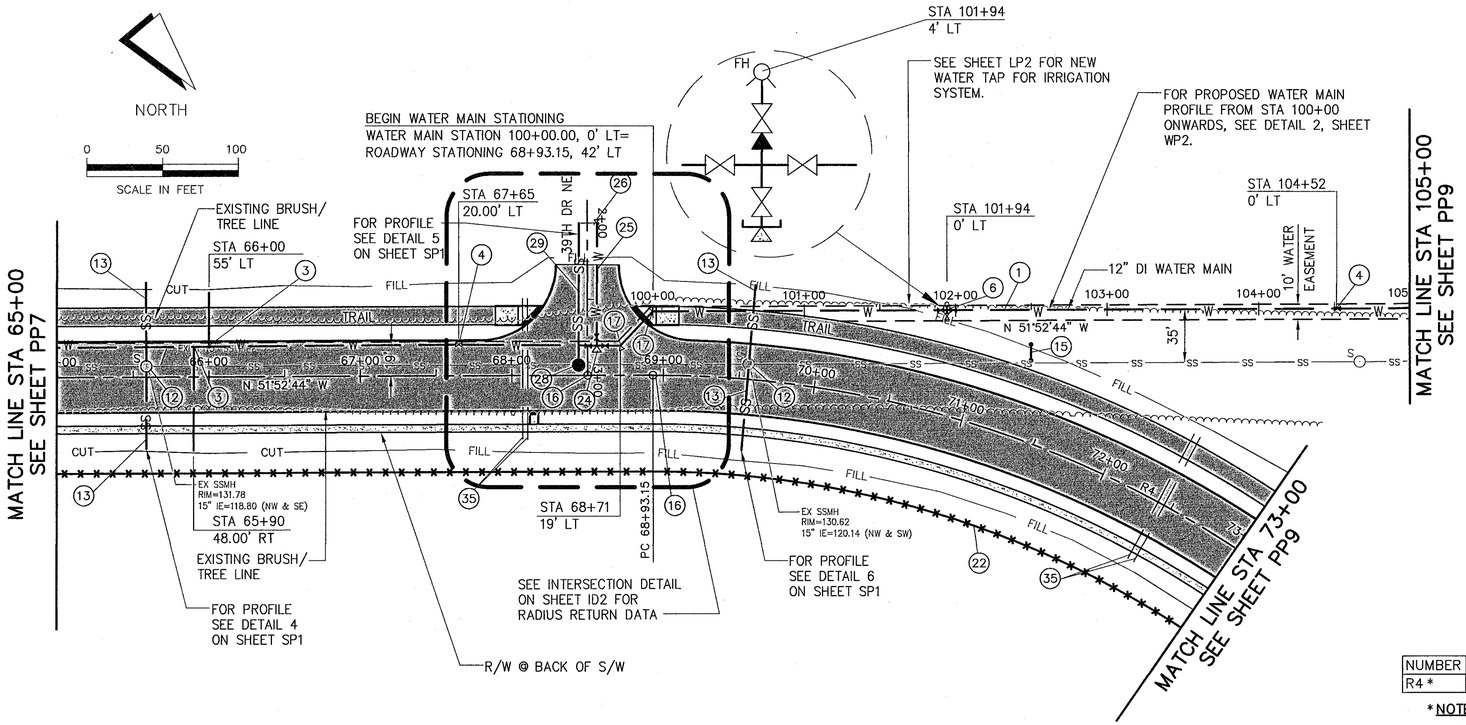

CURB CUT DATA TABLE

STA (LT & RT)
65+10
65+40
65+70
66+00
66+30
66+60
66+90
67+20
67+50
67+70
69+30
69+60
69+90
70+20
70+50
70+80
71+10
71+40
71+70
72+00
72+30
72+60
72+90

CONSTRUCTION NOTES

1. INSTALL DUCTILE IRON PIPE FOR WATER MAIN 12 IN. DIAM.
3. INSTALL 2" WATER SERVICE PER CITY STANDARD DETAIL W-050. BURY METER BOX AND INSTALL MARKER POST.
4. INSTALL 12" GATE VALVE MJxMJ AND VALVE BOX PER CITY STANDARD DETAIL W-190.
6. INSTALL 12" FLANGED CROSS WITH 3-12" GATE VALVES FLxMJ (NW, NE & SE) 1-12"x6" REDUCER FLxFL 1-6" GATE VALVE FLxMJ AND VALVE BOX PER CITY STANDARD DETAIL W-190. INSTALL 1-12" PLUG MJ (NE). INSTALL FIRE HYDRANT ASSEMBLY (SW) PER CITY STANDARD DETAIL W-010 WITH FIRE HYDRANT CONCRETE PAD PER CITY STANDARD DETAIL W-020.
12. ADJUST SANITARY SEWER MANHOLE TO GRADE. SEE SHEET SP1 FOR RIM ELEVATIONS.
13. INSTALL PVC SANITARY SEWER PIPE 6 IN. DIAM. CONNECT 6" SANITARY SEWER LINE TO EXISTING MANHOLE. INSTALL TEMPORARY PLUG AT END OF LINE AND PROVIDE SURFACE MARKER PER CITY OF ARLINGTON STANDARD DETAIL SS-090. SEE SHEET SP1 FOR PROFILES.
15. STA 71+30, LT. RELOCATED CHAIN LINK GATE (10' WIDE x 6' HIGH) & END POSTS FROM STA 55+13.5, LT (SHT PP1). EXACT LOCATION TO BE DETERMINED BY ENGINEER.
16. INSTALL MONUMENT CASE AND COVER PER CITY STANDARD DETAIL R-130. STA 68+93.15, 0' LT.
17. INSTALL 12" 45° BEND WITH RETAINED JOINTS. INSTALL THRUST BLOCK PER CITY STANDARD DETAIL W-160.
22. STA 65+00 TO 73+00, 63.2' RT. INSTALL 6' HIGH CHAIN LINK FENCE TYPE 3 PER WSDOT STANDARD PLAN L-20.10-02.
24. 68+56, 19' LT., INSTALL 1-12"x8" TEE FL X FL / 2-12" GATE VALVES FL X MJ AND 1-8" GATE VALVE FL X MJ WITH BLOCKING.
25. INSTALL DUCTILE IRON PIPE FOR WATER MAIN 8 IN DIA. 80 LF.
26. TEMP. CAP & BLOCK.INSTALL BLOW-OFF PER CITY STD DETAIL W-180.
28. INSTALL TYPE 1-54"* MANHOLE.
29. INSTALL PVC SANITARY SEWER PIPE 8 IN DIA. CONNECT TO NEW MANHOLE PLUG AT END OF LINE AND PROVIDE SURFACE MARKER PER CITY STANDARD DETAIL SS-090. SEE SHEET SP1 FOR PROFILE.
35. CONTRACTOR SHALL INSTALL 2-2" PVC CONDUITS (TOTAL LENGTH 200 LF PER LOCATION) IN OPEN TRENCH PROVIDED BY OTHERS. BACKFILL SHALL BE PROVIDED BY OTHERS.

CURVE TABLE

NUMBER	DELTA ANGLE	TANGENT	RADIUS	ARC LENGTH
R4 *	53°12'49"	350.64'	700.00'	650.13'

*NOTE:

PI STA 72+43.79
N 427,380.20
E 1,312,180.26

AIRPORT BOULEVARD

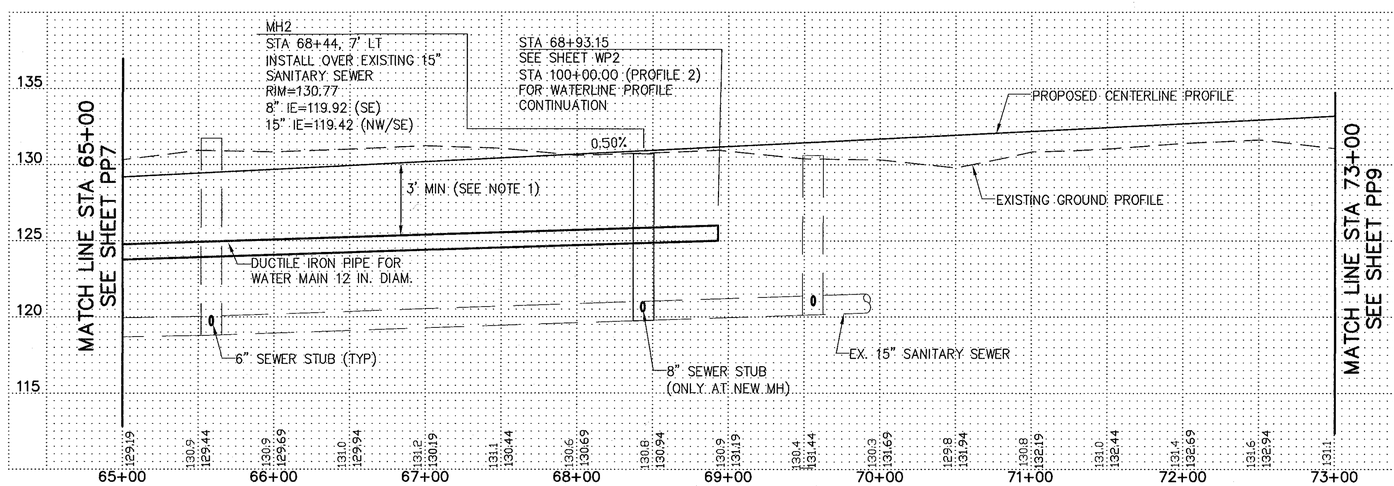

NOTES:

1. MAINTAIN 3' MINIMUM COVER UNDER ROADWAY.
2. BENDS TO BE FURNISHED WITH MECHANICAL RESTRAINED JOINTS PER CITY STANDARD 4-2.06.

PLAN CHECK	BY	DATE

DATE	NO.	REVISION	BY

DESIGNED BY: BJH & DLM
DRAWN BY: MPN

BRIAN J. HUSCHKA, STATE OF WASHINGTON, REGISTERED PROFESSIONAL ENGINEER 4-26-13

APPROVED FOR CONSTRUCTION
JAMES KELLY, PE
PUBLIC WORKS DIRECTOR
05-16-13
DATE APPROVED:

CITY OF ARLINGTON

AECOM
710 2nd Ave, Suite 1000
Seattle, Wa 98104
T 206.624.9349
WWW.AECOM.COM

CITY OF ARLINGTON
AIRPORT BOULEVARD ROAD IMPROVEMENTS
PLAN AND PROFILE
STA 65+00 TO STA 73+00

REFERENCE SHEET NO. PP8

SHEET 11 OF 25 SHEETS

Plotted: Apr 26, 2013 - 8:47am randalim P:\Water\60283126 - Airport Blvd Phase 2 Design\CADD\Civil\Sheet\112736-PP7_PP9.dwg Layout Name: LAYOUT2
Last Saved By: huschkab Apr 26, 2013 - 7:23am

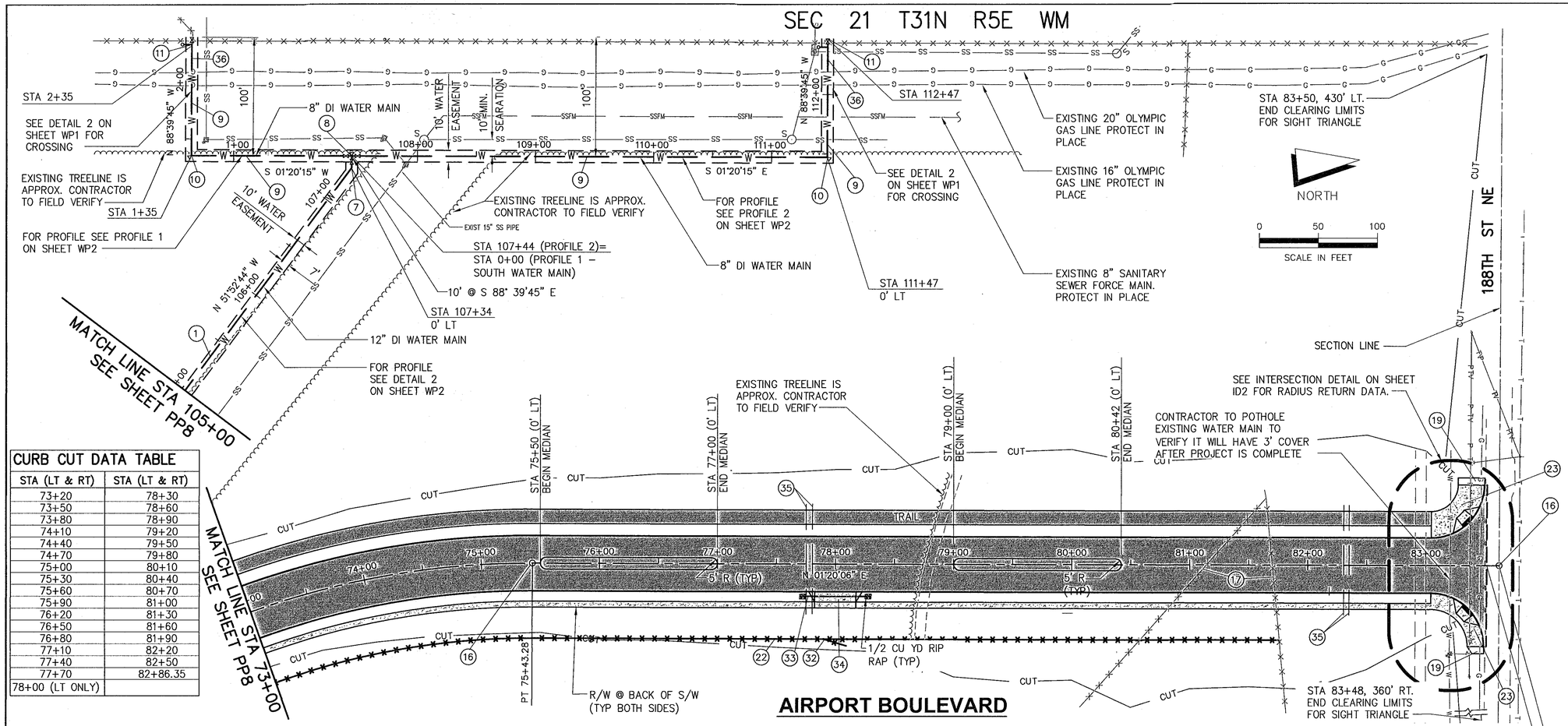

CURB CUT DATA TABLE

STA (LT & RT)	STA (LT & RT)
73+20	78+30
73+50	78+60
73+80	78+90
74+10	79+20
74+40	79+50
74+70	79+80
75+00	80+10
75+30	80+40
75+60	80+70
75+90	81+00
76+20	81+30
76+50	81+60
76+80	81+90
77+10	82+20
77+40	82+50
77+70	82+86.35
78+00 (LT ONLY)	

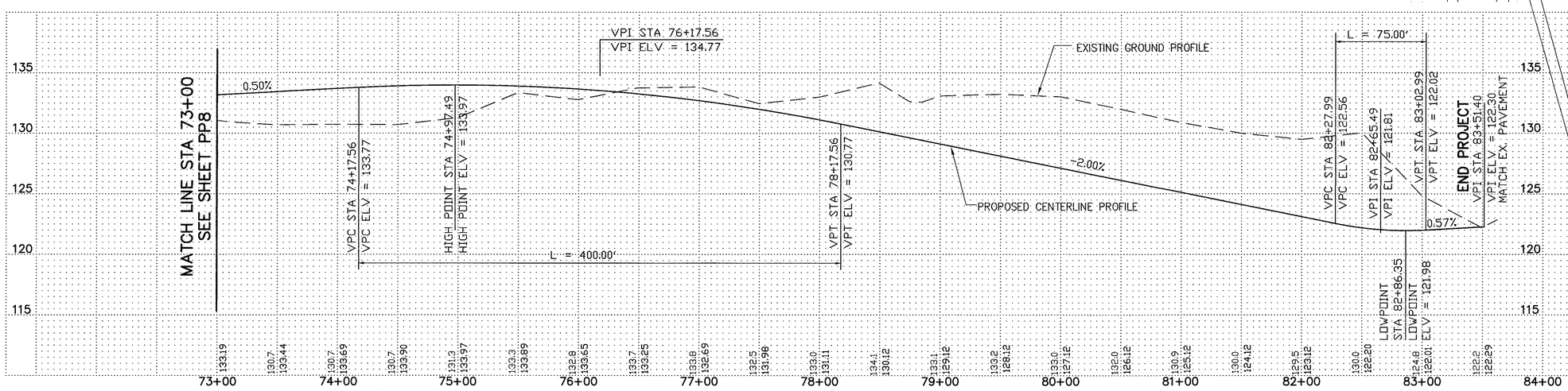

CONSTRUCTION NOTES

1. INSTALL DUCTILE IRON PIPE FOR WATER MAIN 12 IN. DIAM.
7. INSTALL BENDS AND DEFLECT PIPES AT JOINTS TO ACHIEVE NECESSARY ALIGNMENT. JOINT DEFLECTION ANGLE TO BE LESS THAN HALF MANUFACTURER'S RECOMMENDATION. INSTALL THRUST BLOCK PER CITY STANDARD DETAIL W-160. MEGA-LUG RESTRAINTS SHALL BE USED FOR ALL BENDS.
8. INSTALL 12" FLANGED TEE WITH 1-12" GATE VALVE FLxMJ (E). INSTALL 2-12"x8" REDUCERS FLxFL (N&S) AND 2-8" GATE VALVES FLxMJ (N&S). INSTALL VALVE BOX FOR EACH VALVE PER CITY STANDARD DETAIL W-190.
9. INSTALL DUCTILE IRON PIPE FOR WATER MAIN 8 IN. DIAM.
10. INSTALL 8" 90° BEND. INSTALL THRUST BLOCK PER CITY STANDARD DETAIL W-160. MEGA-LUG RESTRAINTS SHALL BE USED FOR ALL BENDS.
11. DISCONNECT EXISTING BLOWOFF AT END OF EXISTING 8" WATER MAIN. INSTALL 8" GATE VALVE AND CONNECT 8" WATER. FIELD VERIFY DEPTH OF EXISTING 8" WATER MAIN PRIOR TO CONSTRUCTION AND ADJUST ALIGNMENT OF 8" WATER AS NEEDED TO CONNECT. RECONNECT BLOWOFF ASSEMBLY TO 8" WATER MAIN.
16. INSTALL MONUMENT CASE AND COVER PER CITY STANDARD DETAIL R-130.
    STA 75+43.28 & 83+61.96, 0' LT.
17. REMOVE 280 LF OF WIRE FENCE CONNECT REMAINDER TO NEW CHAIN LINK FENCE.
19. INSTALL ASPHALT RAMP. SEE DETAIL ON SHEET RS2.
22. STA 73+00 TO 81+76, 63.2' RT. INSTALL 6' HIGH CHAIN LINK FENCE TYPE 3 PER WSDOT STANDARD PLAN L-20.10-20. CONNECT TO EXISTING FENCES WITH PULL POST OR CORNER POST.
23. INSTALL CEMENT CONCRETE SIDEWALK AT RADIUS RETURN. SEE ROADWAY SECTION A OR B FOR SIDEWALK DETAILS.
32. INSTALL 20' DOUBLE GATE PER WSDOT STANDARD PLAN L-30.10-01
33. STA 77+75 TO 78+25, 27.25' RT., INSTALL 50 LF 12"ø DI STORM DRAIN PER CITY STANDARD 3-3.01. MATCH RAINGARDEN ELEVS.
34. STA 78+00, 23' RT., INSTALL 35' DRIVEWAY PER WSDOT STANDARD PLAN F-80.10-02, TYPE 3.
35. CONTRACTOR SHALL INSTALL 2-2" PVC CONDUITS (TOTAL LENGTH = 200 LF PER LOCATION) IN OPEN TRENCH PROVIDED BY OTHERS. BACKFILL SHALL BE PROVIDED BY OTHERS.
36. INSTALL COMB. AIR RELEASE/AIR VACUUM VALVE ASSEMBLY 1 IN. PER CITY STANDARD DETAIL W-260.

END CONSTRUCTION
STA 83+61.96

END PROJECT
STA 83+51.40
MATCH EXISTING PAVEMENT
N 428,538.65
E 1,312,207.25

PLAN CHECK	BY	DATE

DATE	NO.	REVISION	BY

DESIGNED BY: BJH & DLM
DRAWN BY: MPN

BRIAN J. HUSCHKA, STATE OF WASHINGTON, REGISTERED PROFESSIONAL ENGINEER 9-26-13

APPROVED FOR CONSTRUCTION
JAMES KELLY, PE
PUBLIC WORKS DIRECTOR
05-16-13
DATE APPROVED:

CITY OF ARLINGTON

AECOM
710 2nd Ave, Suite 1000
Seattle, Wa 98104
T 206.624.9349
WWW.AECOM.COM

CITY OF ARLINGTON
AIRPORT BOULEVARD ROAD IMPROVEMENTS
PLAN AND PROFILE
STA 73+00 TO STA 83+51.40

REFERENCE SHEET NO. PP9

SHEET 12 OF 25 SHEETS

Plotted: Apr 26, 2013 - 8:47am randalim P:\Water\60283126 - Airport Blvd Phase 2 Design\CADD\Civil\Sheet\112736-PP7_PP8.dwg Layout Name: LAYOUT3
Last Saved By: huschkab Apr 26, 2013 - 7:23am

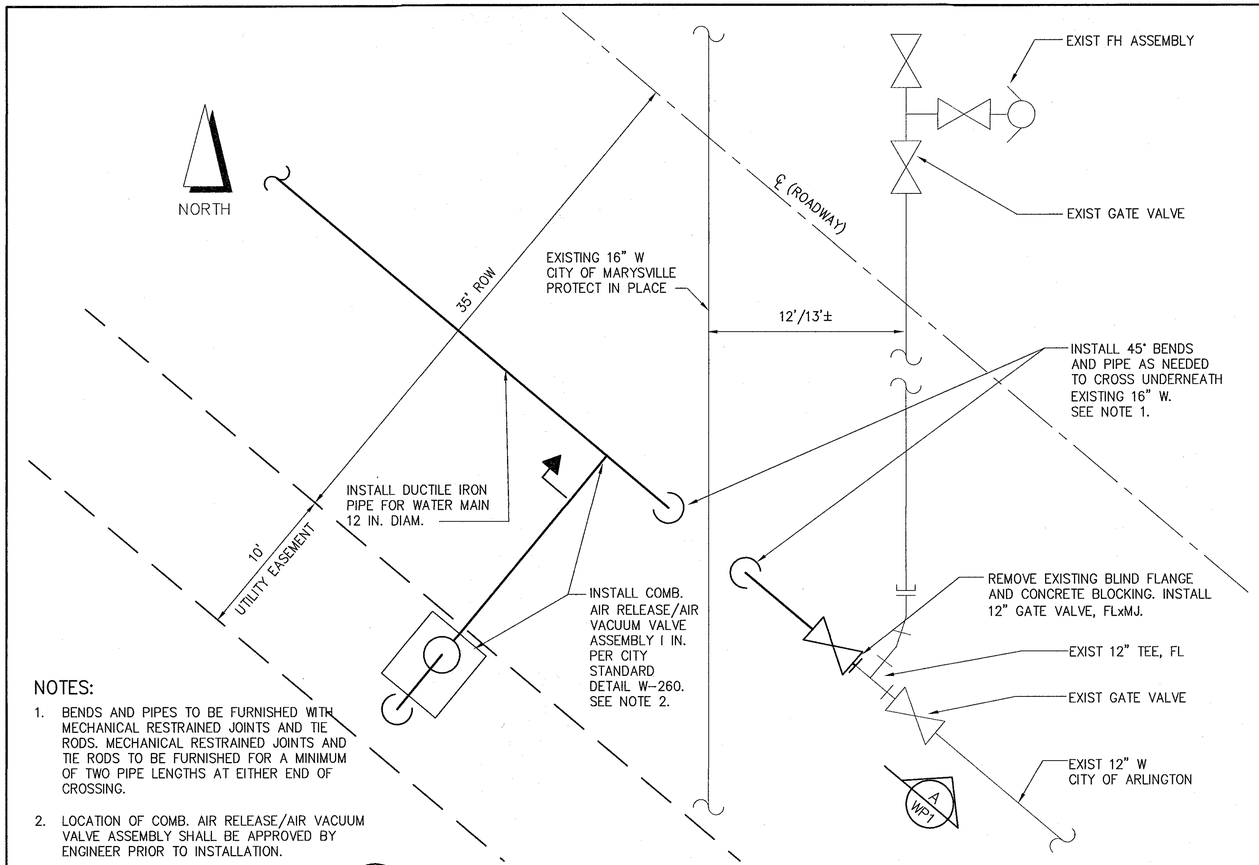

NOTES:

1. BENDS AND PIPES TO BE FURNISHED WITH MECHANICAL RESTRAINED JOINTS AND TIE RODS. MECHANICAL RESTRAINED JOINTS AND TIE RODS TO BE FURNISHED FOR A MINIMUM OF TWO PIPE LENGTHS AT EITHER END OF CROSSING.
2. LOCATION OF COMB. AIR RELEASE/AIR VACUUM VALVE ASSEMBLY SHALL BE APPROVED BY ENGINEER PRIOR TO INSTALLATION.

1 PP7 CONNECTION TO EXISTING 12" WATER MAIN

NTS

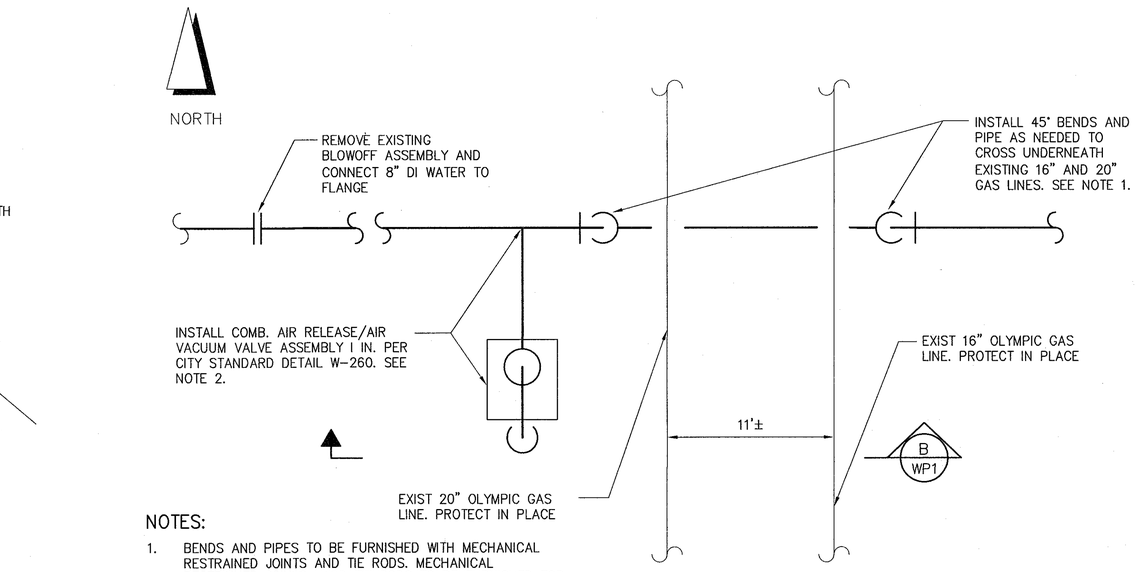

NOTES:

1. BENDS AND PIPES TO BE FURNISHED WITH MECHANICAL RESTRAINED JOINTS AND TIE RODS. MECHANICAL RESTRAINED JOINTS AND TIE RODS TO BE FURNISHED FOR A MINIMUM OF TWO PIPE LENGTHS AT EITHER END OF CROSSING.
2. LOCATION OF COMB. AIR RELEASE/AIR VACUUM VALVE ASSEMBLY SHALL BE APPROVED BY ENGINEER PRIOR TO INSTALLATION.

2 PP9 8" WATER MAIN CROSSING EXISTING GAS MAINS

NTS

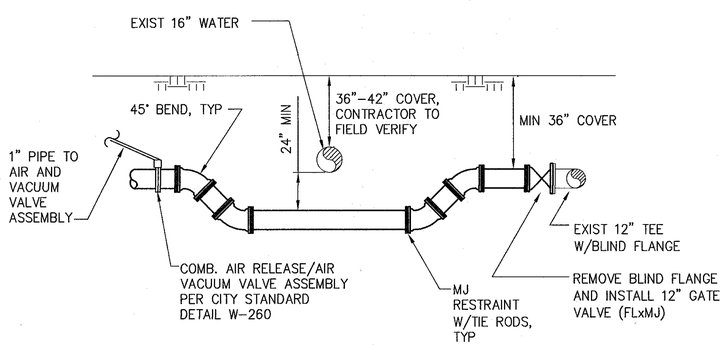

A WP1 CONNECTION TO EXISTING 12" WATER MAIN

NTS

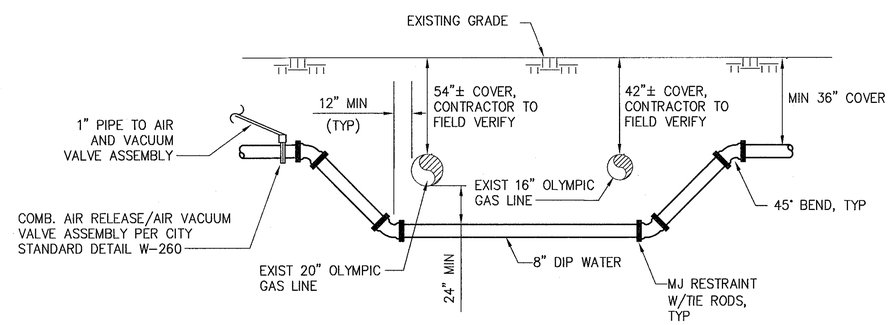

B WP1 8" WATER MAIN CROSSING EXISTING GAS MAINS

NTS

PLAN CHECK	BY	DATE

DATE	NO.	REVISION	BY

DESIGNED BY: DLM
DRAWN BY: MPN

BRIAN J. HUSCHKA, STATE OF WASHINGTON, REGISTERED PROFESSIONAL ENGINEER 4-26-13

APPROVED FOR CONSTRUCTION
JAMES KELLY, PE
PUBLIC WORKS DIRECTOR
05-16-13
DATE APPROVED:

CITY OF ARLINGTON

AECOM
710 2nd Ave, Suite 1000
Seattle, Wa 98104
T 206.624.9349
WWW.AECOM.COM

CITY OF ARLINGTON
AIRPORT BOULEVARD ROAD IMPROVEMENTS
WATER MAIN DETAILS

REFERENCE SHEET NO. WP1

SHEET 13 OF 25 SHEETS

Plotted: Apr 26, 2013 - 8:48am randallm P:\Water\60283126 - Airport Blvd Phase 2 Design\CADD\Civil\Sheet\112736-WP1.dwg Layout Name: LAYOUT
Last Saved By: huschkab Apr 24, 2013 - 11:12am

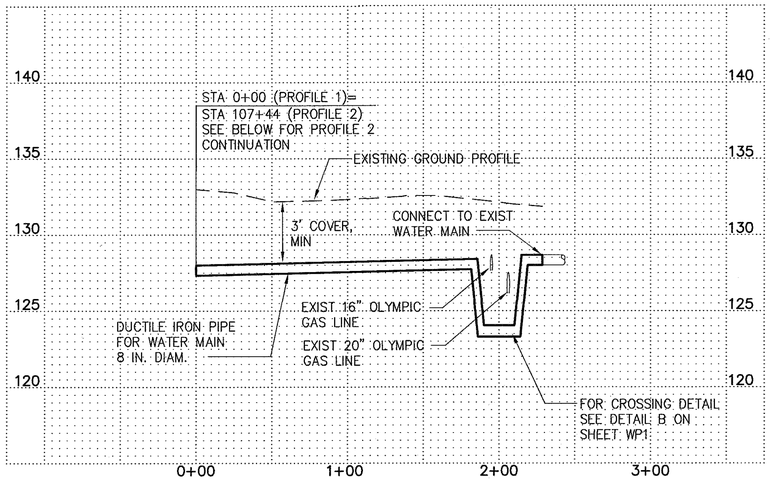

1 / PP9 **WATER MAIN PROFILE**

SCALE: HOR. 1"=50'
VERT. 1"=5'

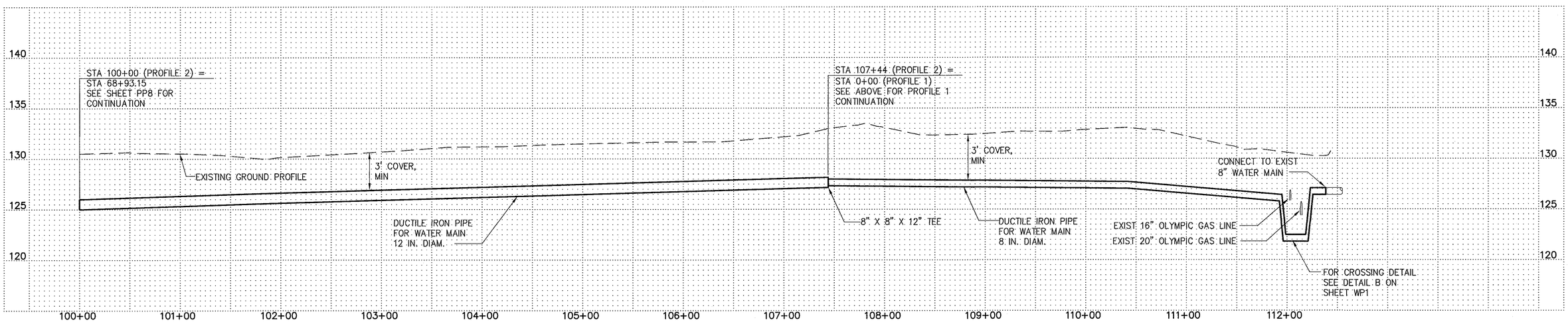

2 / PP9 **WATER MAIN PROFILE**

SCALE: HOR. 1"=50'
VERT. 1"=5'

PLAN CHECK	BY	DATE

DATE	NO.	REVISION	BY

DESIGNED BY: DLM
DRAWN BY: MPN

BRYAN J. HUSONKA — STATE OF WASHINGTON — 38400 — REGISTERED PROFESSIONAL ENGINEER — 9-26-13

APPROVED FOR CONSTRUCTION

JAMES KELLY, PE
PUBLIC WORKS DIRECTOR
05-16-13
DATE APPROVED:

CITY OF ARLINGTON

AECOM
710 2nd Ave, Suite 1000
Seattle, Wa 98104
T 206.624.9349
WWW.AECOM.COM

CITY OF ARLINGTON
AIRPORT BOULEVARD ROAD IMPROVEMENTS
WATER MAIN PROFILES

REFERENCE SHEET NO. WP2

SHEET 14 OF 25 SHEETS

Plotted: Apr 26, 2013 - 8:48am randallm P:\Water\60283126 - Airport Blvd Phase 2 Design\CADD\Civil\Sheet\112736-WP2.dwg Layout Name: LAYOUT1
Last Saved By: huschkab Apr 26, 2013 - 4:30am

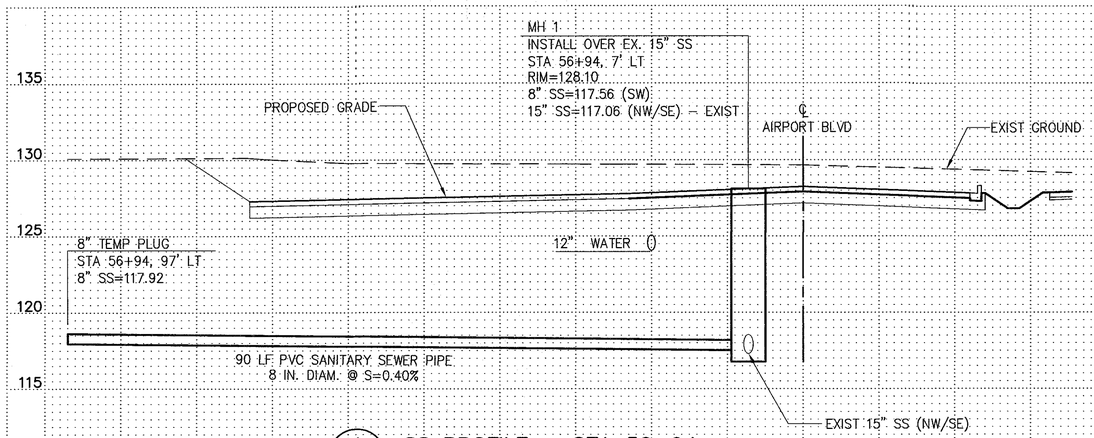

1 PP7 SS PROFILE – STA 56+94

SCALE: HOR. 1"=10'
VERT. 1"=5'

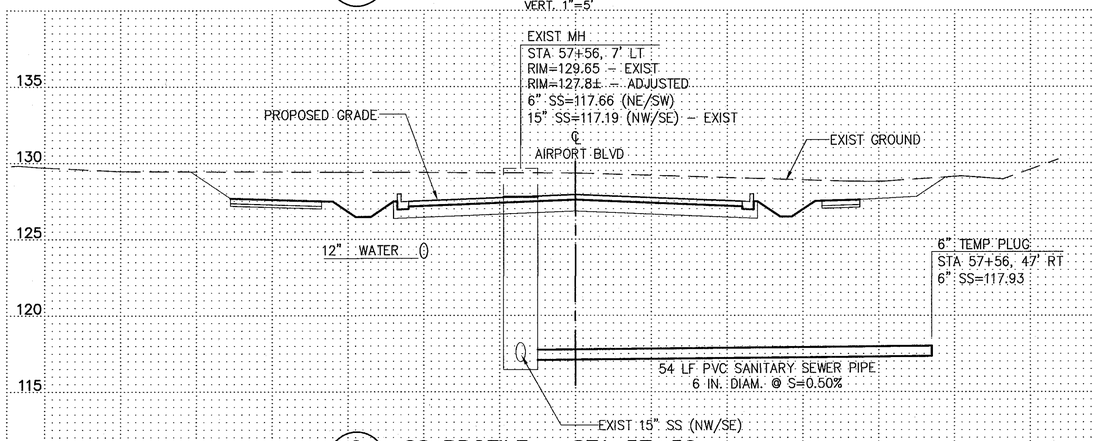

2 PP7 SS PROFILE – STA 57+56

SCALE: HOR. 1"=10'
VERT. 1"=5'

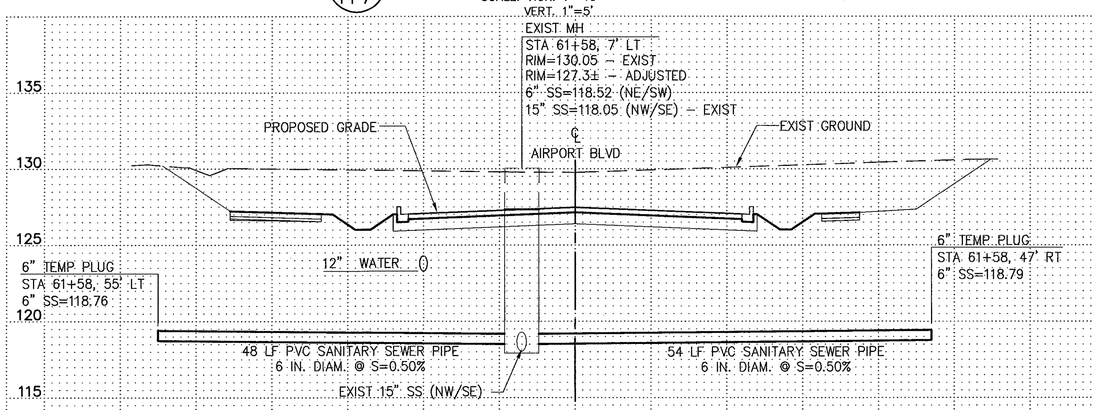

3 PP7 SS PROFILE – STA 61+58

SCALE: HOR. 1"=10'
VERT. 1"=5'

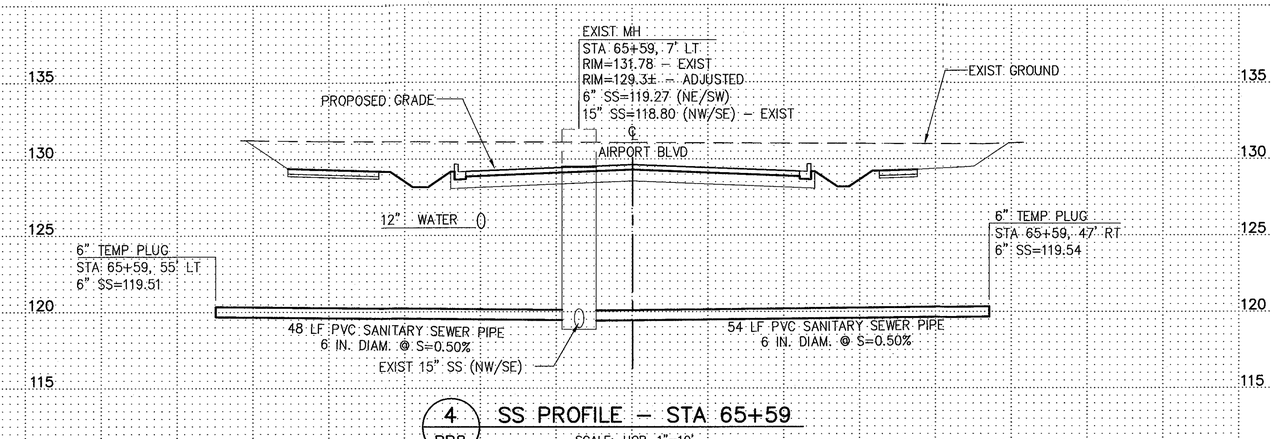

4 PP8 SS PROFILE – STA 65+59

SCALE: HOR. 1"=10'
VERT. 1"=5'

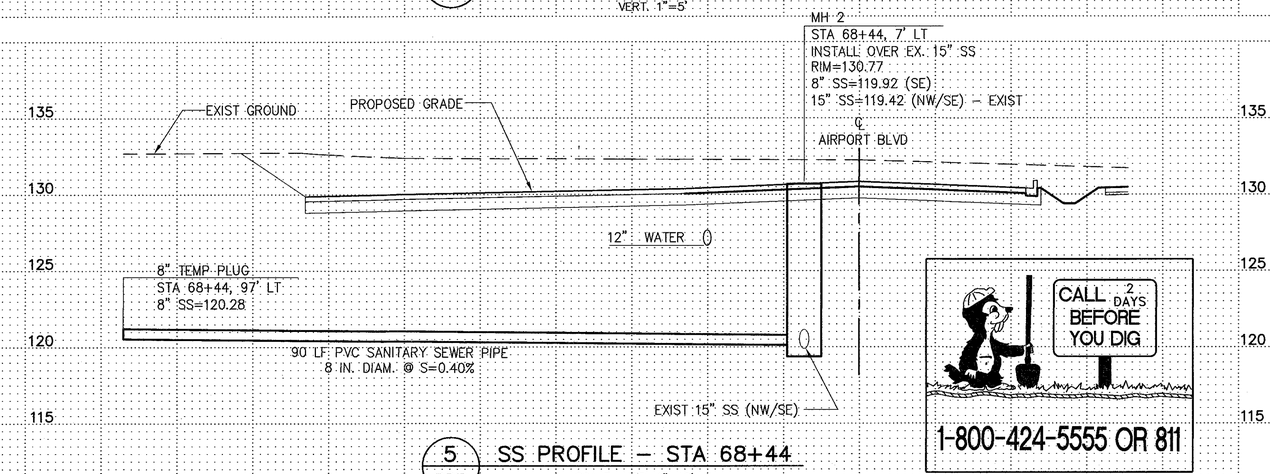

5 PP7 SS PROFILE – STA 68+44

SCALE: HOR. 1"=10'
VERT. 1"=5'

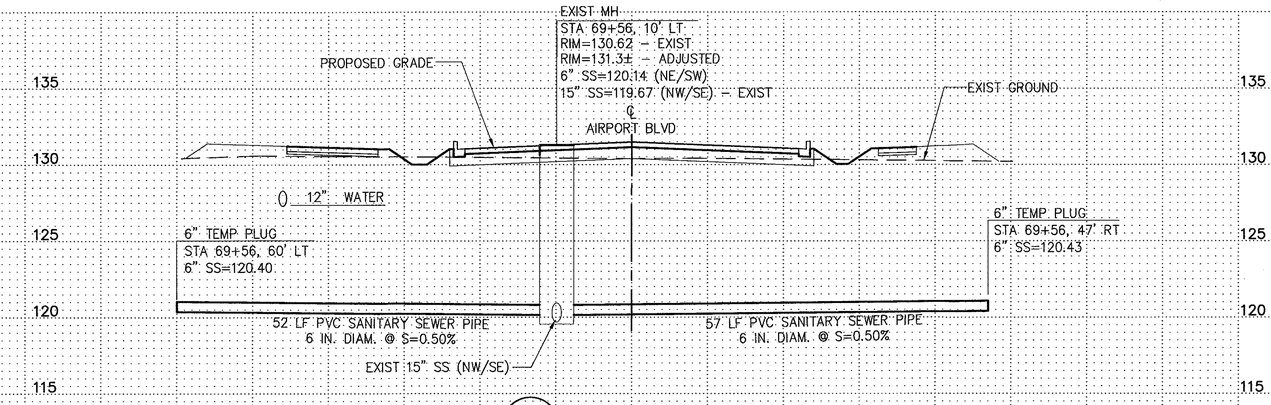

6 PP8 SS PROFILE – STA 69+56

SCALE: HOR. 1"=10'
VERT. 1"=5'

PLAN CHECK	BY	DATE

DATE	NO.	REVISION	BY

DESIGNED BY: DLM
DRAWN BY: MPN

BRYAN H. HUSAKAS – STATE OF WASHINGTON – REGISTERED PROFESSIONAL ENGINEER – 4-26-13

APPROVED FOR CONSTRUCTION

JAMES KELLY, PE
PUBLIC WORKS DIRECTOR
05-16-13

DATE APPROVED:

CITY OF ARLINGTON

AECOM
710 2nd Ave, Suite 1000
Seattle, Wa 98104
T 206.624.9349
WWW.AECOM.COM

CITY OF ARLINGTON
AIRPORT BOULEVARD ROAD IMPROVEMENTS
SANITARY SEWER PROFILES

REFERENCE SHEET NO. SP1

SHEET 15 OF 25 SHEETS

Plotted: Apr 26, 2013 - 8:48am randallm P:\Water\60283126 - Airport Blvd Phase 2 Design\CADD\Civil\Sheet\112736-SP1.dwg Layout Name: LAYOUT1
Last Saved By: husckab Apr 24, 2013 - 12:55pm

SEC 21 T31N R5E WM

NOTES:

1. ALL DIMENSIONS ARE TO FACE OF CURB AND ELEVATIONS ARE AT THE GUTTERLINE.
2. ALL RAMPS ARE SINGLE DIRECTION CURB RAMPS TYPE A PER WSDOT STANDARD PLAN F-40.16-01', UNLESS OTHERWISE NOTED.
   RAMP WIDTH 12' & CURB RAMP = 10'

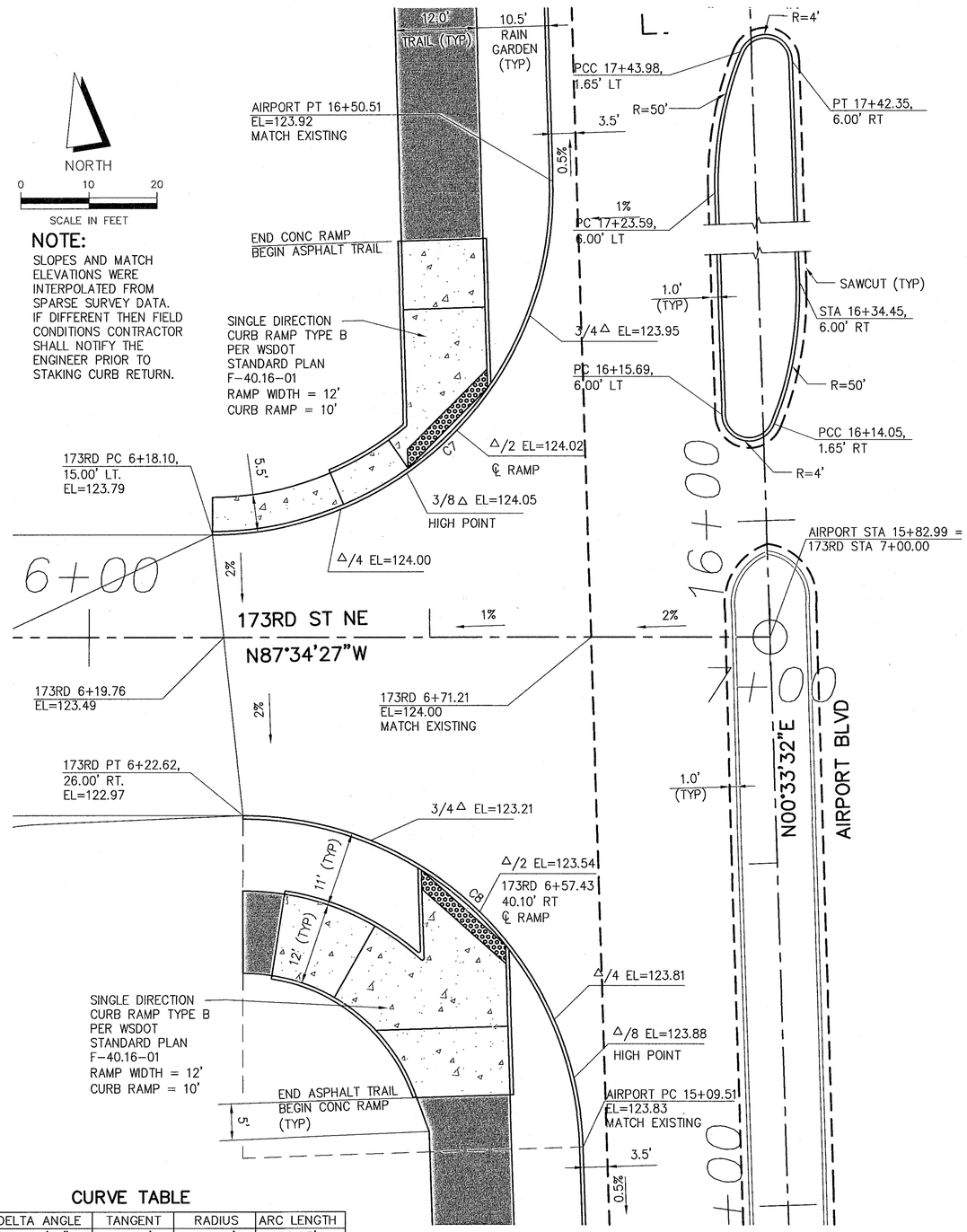

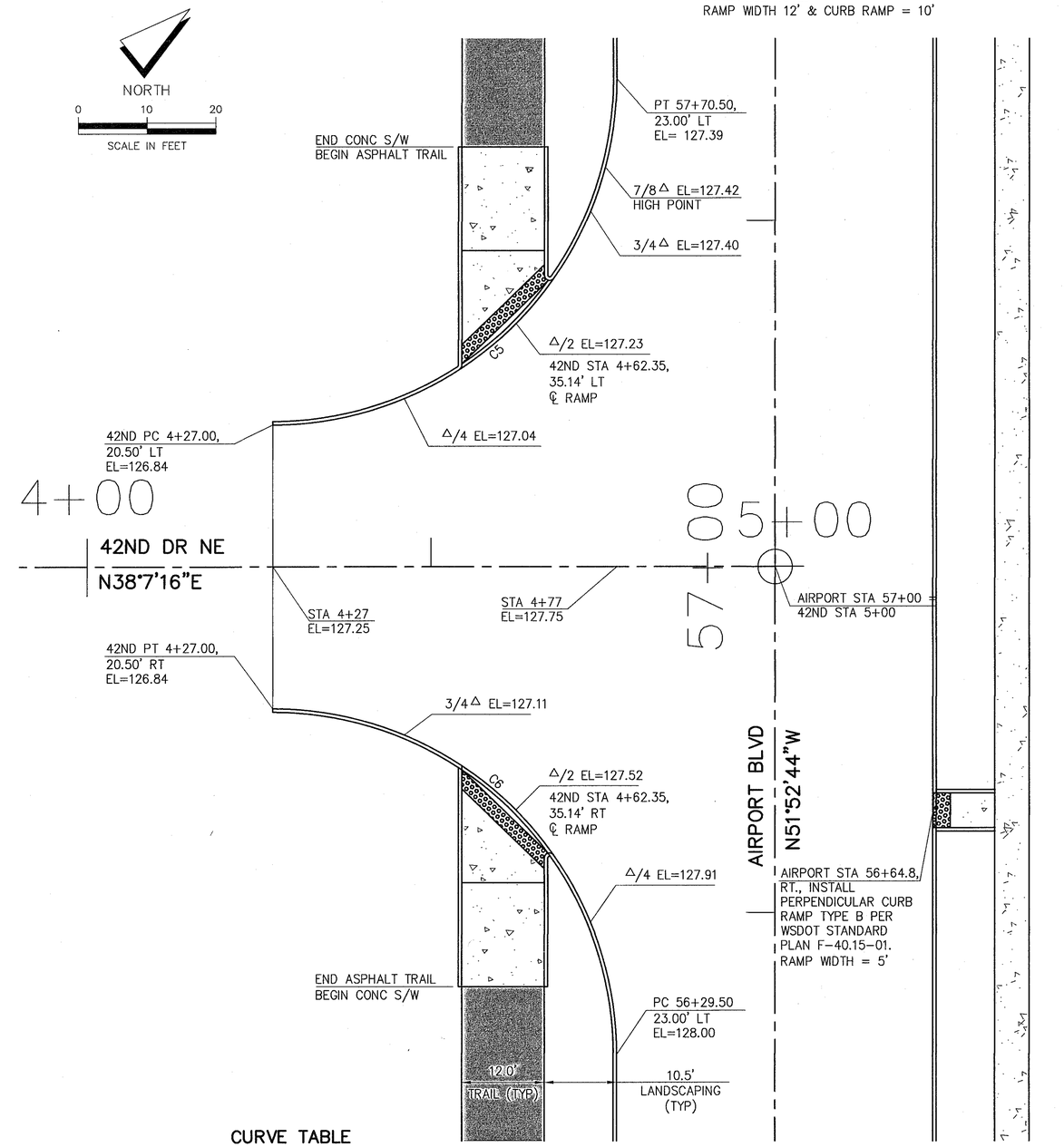

CURVE TABLE

NUMBER	DELTA ANGLE	TANGENT	RADIUS	ARC LENGTH
C7	91°44'10"	51.54'	50.00'	80.05'
C8	88°13'27"	48.47'	50.00'	76.99'

CURVE TABLE

NUMBER	DELTA ANGLE	TANGENT	RADIUS	ARC LENGTH
C5	90°00'00"	50.00'	50.00'	78.54'
C6	90°00'00"	50.00'	50.00'	78.54'

PLAN CHECK	BY	DATE

DATE	NO.	REVISION	BY

DESIGNED BY: BJH
DRAWN BY: MPN

BRIAN J. HUSCHKA, STATE OF WASHINGTON, REGISTERED PROFESSIONAL ENGINEER
4-26-13

APPROVED FOR CONSTRUCTION
JAMES KELLY, PE
PUBLIC WORKS DIRECTOR
05-16-13
DATE APPROVED:

CITY OF ARLINGTON

AECOM
710 2nd Ave, Suite 1000
Seattle, Wa 98104
T 206.624.9349
WWW.AECOM.COM

CITY OF ARLINGTON
AIRPORT BOULEVARD ROAD IMPROVEMENTS
INTERSECTION DETAILS

REFERENCE SHEET NO. ID1

SHEET 16 OF 25 SHEETS

Plotted: Apr 26, 2013 - 8:49am randallm P:\Water\60283126 - Airport Blvd Phase 2 Design\CADD\Civil\Sheet\112736-ID1.dwg Layout Name: LAYOUT
Last Saved By: huschkab Apr 26, 2013 - 4:36am

SEC 21 T31N R5E WM

NOTES:

1. ALL DIMENSIONS ARE TO FACE OF CURB AND ELEVATIONS ARE AT THE GUTTERLINE.
2. ALL RAMPS ARE SINGLE DIRECTION CURB RAMPS TYPE A PER WSDOT STANDARD PLAN F-40.16-01, UNLESS OTHERWISE NOTED.
   RAMP WIDTH 12' & CURB RAMP = 10'

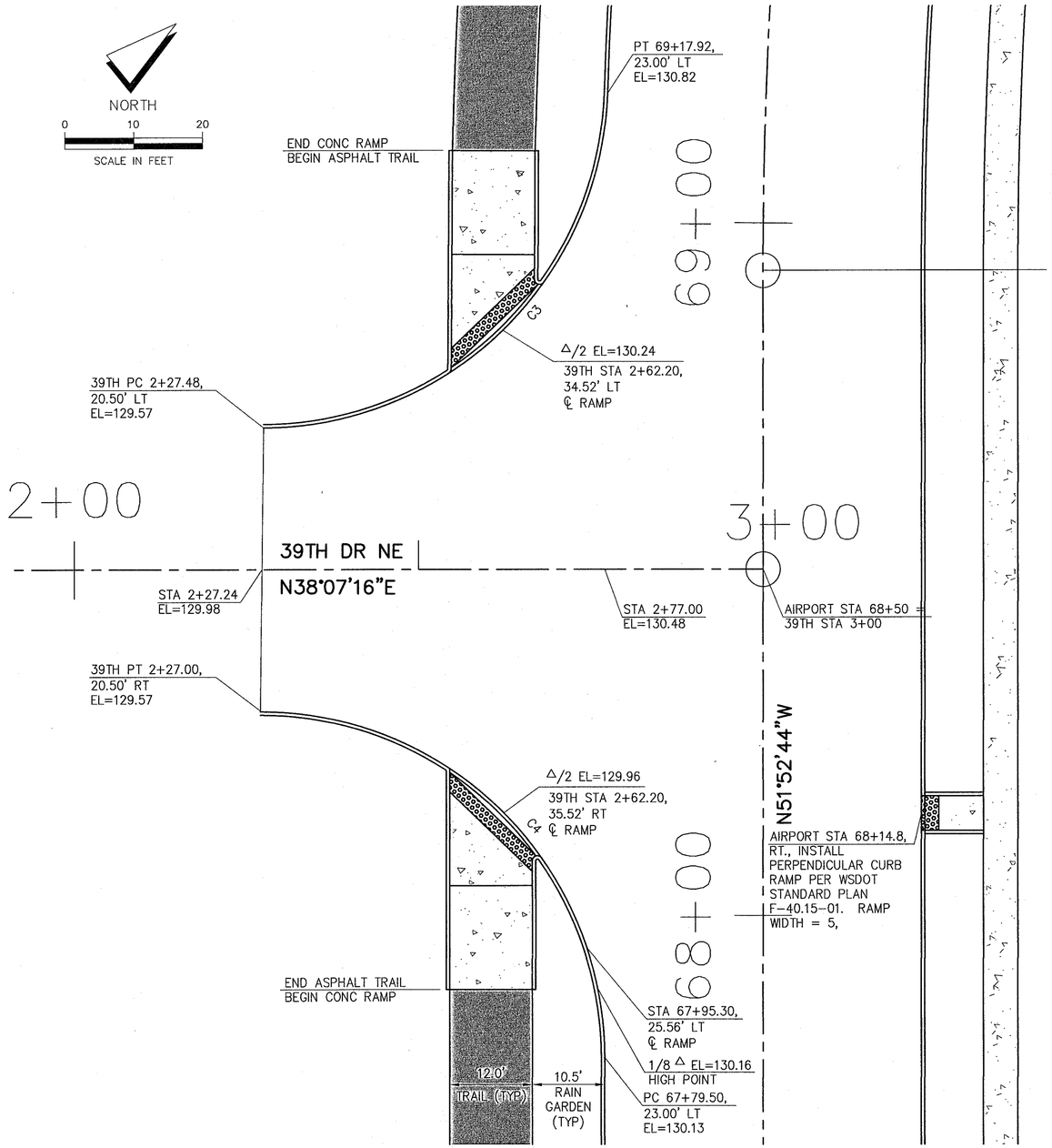

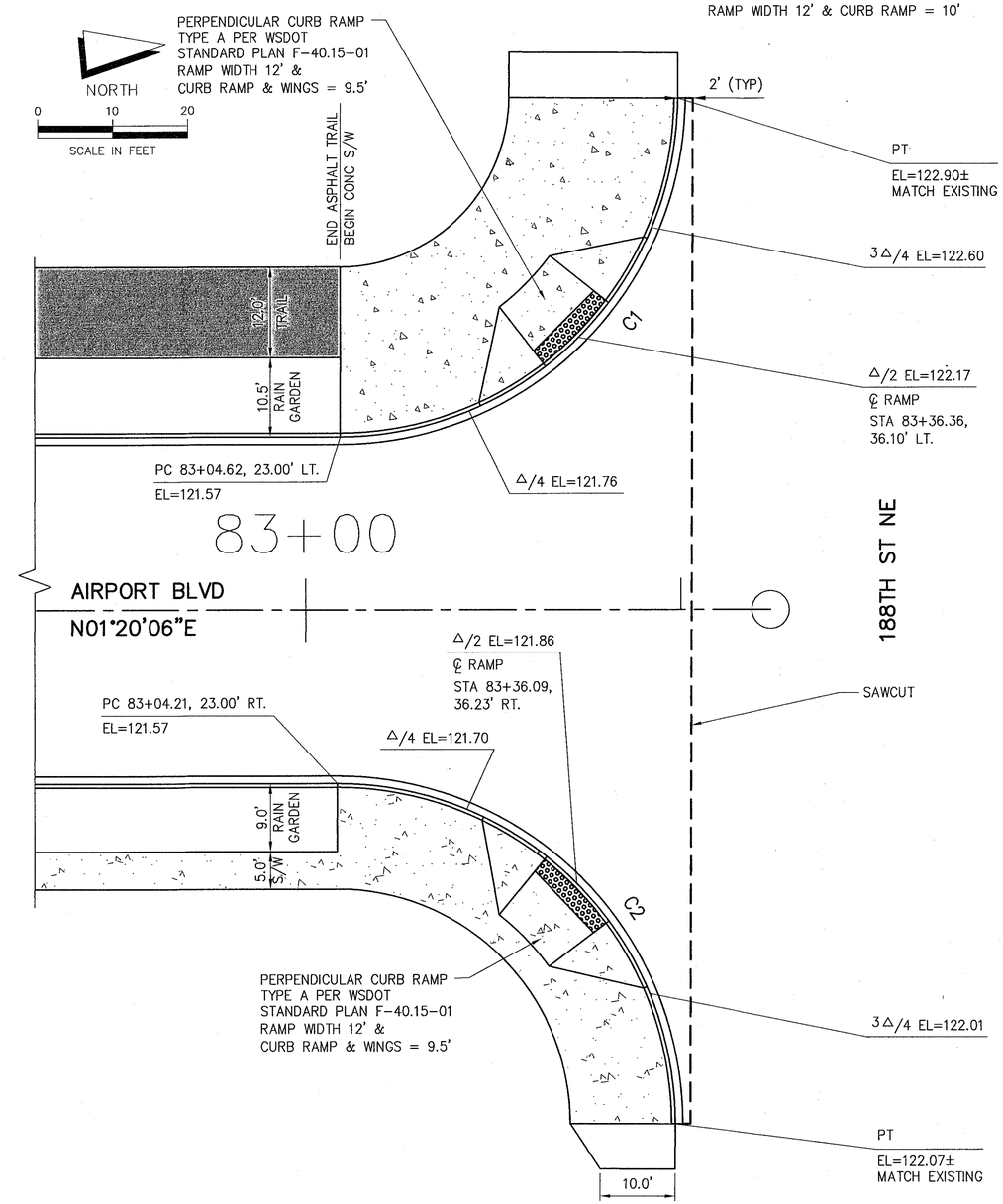

CURVE TABLE

NUMBER	DELTA ANGLE	TANGENT	RADIUS	ARC LENGTH
C3	87°58'20"	48.26'	50.00'	76.77'
C4	90°00'00"	50.00'	50.00'	78.54'

CURVE TABLE

NUMBER	DELTA ANGLE	TANGENT	RADIUS	ARC LENGTH
C1	89°43'16"	44.78'	45.00'	70.47'
C2	90°11'41"	45.15'	45.00'	70.84'

PLAN CHECK	BY	DATE

DATE	NO.	REVISION	BY

DESIGNED BY: BJH
DRAWN BY: MPN

BRYAN J. HUSCHKA — STATE OF WASHINGTON — REGISTERED PROFESSIONAL ENGINEER — 5-16-13

APPROVED FOR CONSTRUCTION
JAMES KELLY, PE
PUBLIC WORKS DIRECTOR
05-16-13
DATE APPROVED:

CITY OF ARLINGTON

AECOM
710 2nd Ave, Suite 1000
Seattle, Wa 98104
T 206.624.9349
WWW.AECOM.COM

CITY OF ARLINGTON
AIRPORT BOULEVARD ROAD IMPROVEMENTS
INTERSECTION DETAILS

REFERENCE SHEET NO. ID2

SHEET 17 OF 25 SHEETS

Plotted: Apr 26, 2013 - 8:50am randalim P:\Water\60283126 - Airport Blvd Phase 2 Design\CADD\Civil\Sheet\112736-ID2.dwg Layout Name: LAYOUT
Last Saved By: huschkab Apr 24, 2013 - 4:16pm

SEC 21 T31N R5E WM

BEGIN CONSTRUCTION
STA. 53+00
BEGIN TWO-WAY LEFT TURN CENTER LINE (6' LT)
BEGIN WIDE LANE LINE (18' LT)
MATCH EXISTING LANE LINES

STA. 54+57.23
BEGIN TWO-WAY LEFT TURN CENTER LINE (6' RT)
BEGIN WIDE LANE LINE (18' RT)
MATCH EXISTING LANE LINES

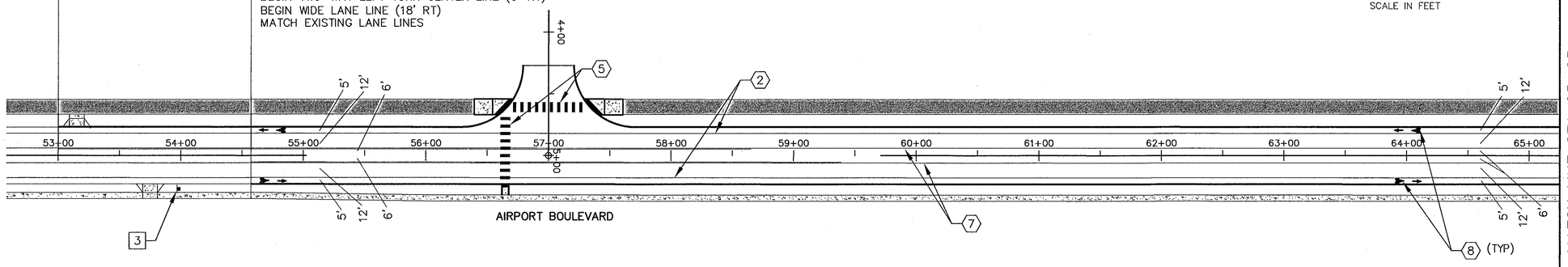

CHANNELIZATION LEGEND

1. PAINTED DOUBLE CENTER LINE (YELLOW)
2. PAINTED WIDE LANE LINE
3. PLASTIC WIDE LANE LINE
4. PLASTIC 24" STOP LINE
5. PLASTIC CROSSWALK LINE PER WSDOT STANDARD PLAN M-15.10-01
6. PLASTIC TRAFFIC ARROW PER WSDOT STANDARD PLAN M-24.40-01
   STA 74+50, 0' LT = 2 EA
7. PAINTED TWO-WAY LEFT TURN CENTER LINE
8. PLASTIC BICYCLE LANE SYMBOL PER WSDOT STANDARD PLAN M-9.50-01
   STA 54+00, LT & RT
   STA 64+00, LT & RT
   STA 74+00, LT & RT

CHANNELIZATION NOTES:

1. PLASTIC AND PAINTED LINES SHALL BE PER WSDOT STANDARD PLAN M-20.10-02 UNLESS OTHERWISE NOTED.
2. STA 10+00 TO 54+00 FOR CROSSWALK LOCATIONS SEE SHTS PP1 THRU PP6.

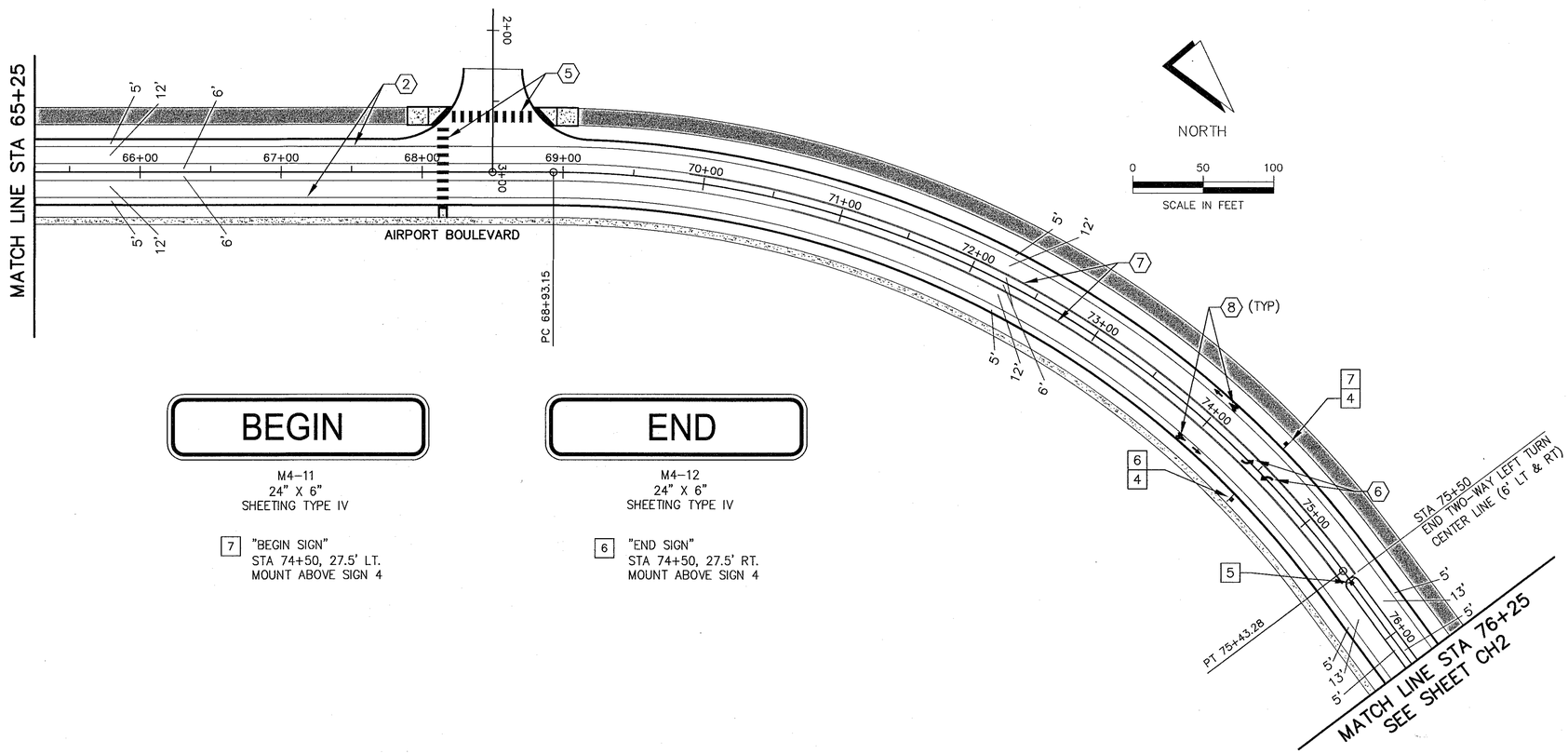

SIGN LEGEND

R2-1
24" X 30"
SHEETING TYPE IV

R3-9B
24" X 36"
SHEETING TYPE IV

3 "SPEED LIMIT 25" PER MUTCD & WSDOT DESIGN MANUAL
STA 54+00, 27.5' RT.

4 "CENTER LANE" PER MUTCD & WSDOT DESIGN MANUAL
STA 74+50, 27.5' RT.
STA 74+50, 27.5' LT.

M4-11
24" X 6"
SHEETING TYPE IV

7 "BEGIN SIGN"
STA 74+50, 27.5' LT.
MOUNT ABOVE SIGN 4

M4-12
24" X 6"
SHEETING TYPE IV

6 "END SIGN"
STA 74+50, 27.5' RT.
MOUNT ABOVE SIGN 4

R4-7
24" X 30"
SHEETING TYPE IV

5 "STAY RIGHT SIGN" PER MUTCD & WSDOT DESIGN MANUAL
STA 75+53, 0' LT.
STA 16+15, 1.5' LT.
STA 17+43, 1.5' RT.

SIGN NOTES:

1.) SIGNS SHALL BE INSTALLED PER CITY DETAIL R-120.

2.) STREET SIGNS SHALL BE PER CITY DETAIL R-110 AND SHALL BE DOUBLED SIDED.

3.) SIGNS PER WSDOT SIGN FABRICATION MANUAL.

PLAN CHECK	BY	DATE

DATE	NO.	REVISION	BY

DESIGNED BY: BJH
DRAWN BY: MPN

BRIAN J. HUSNIK — STATE OF WASHINGTON — REGISTERED PROFESSIONAL ENGINEER — 4-26-13

APPROVED FOR CONSTRUCTION
JAMES KELLY, PE
PUBLIC WORKS DIRECTOR
05-16-13
DATE APPROVED:

CITY OF ARLINGTON

AECOM
710 2nd Ave, Suite 1000
Seattle, Wa 98104
T 206.624.9349
WWW.AECOM.COM

CITY OF ARLINGTON
AIRPORT BOULEVARD ROAD IMPROVEMENTS
CHANNELIZATION & SIGNING PLAN

REFERENCE SHEET NO. CH1

SHEET 18 OF 25 SHEETS

Plotted: Apr 26, 2013 - 8:51am randallm P:\Water\60283126 - Airport Blvd Phase 2 Design\CADD\Civil\Sheet\112736-CH1_CH2.dwg Layout Name: CH1
Last Saved By: huschkab Apr 24, 2013 - 4:57pm

SEC 21 T31N R5E WM

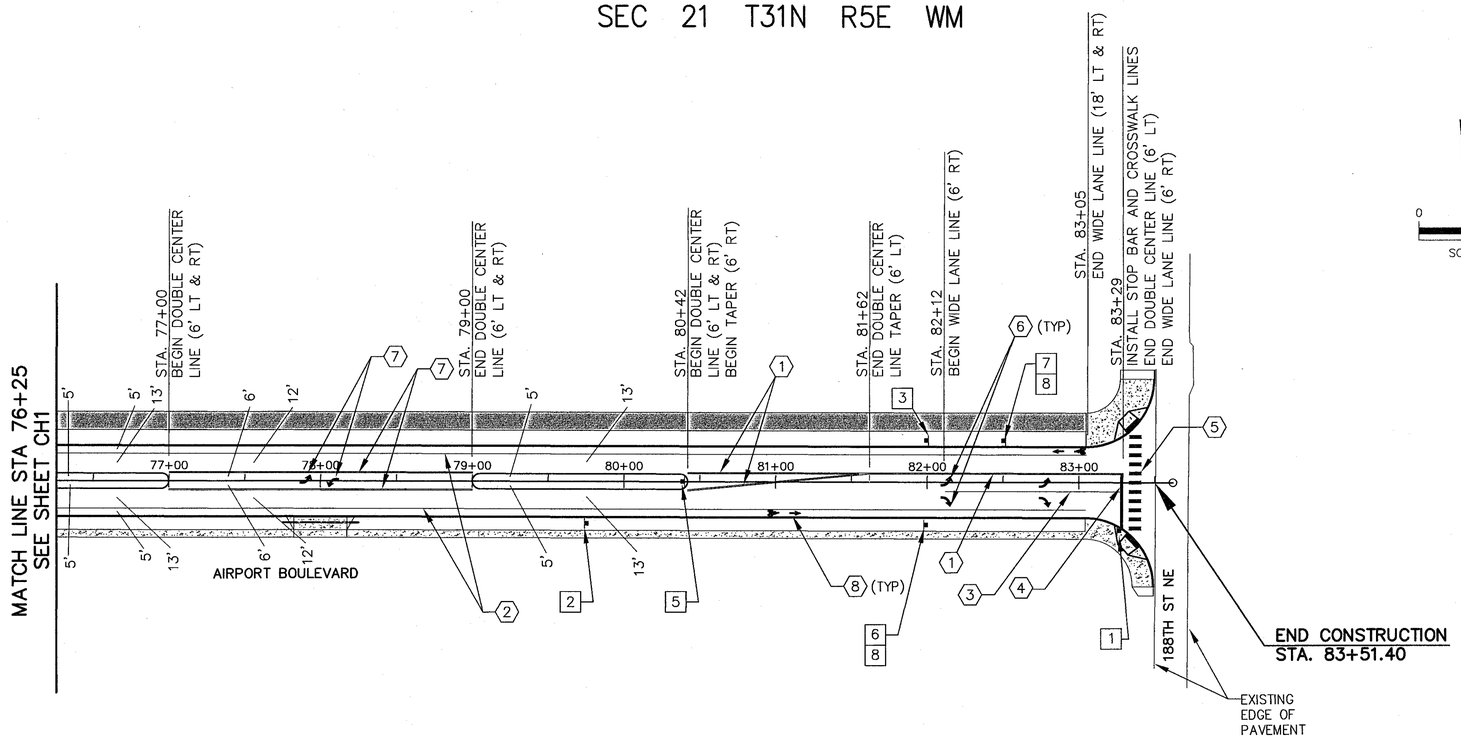

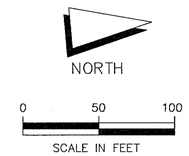

CHANNELIZATION LEGEND

1. PAINTED DOUBLE CENTER LINE (YELLOW)
2. PAINTED WIDE LANE LINE
3. PLASTIC WIDE LANE LINE
4. PLASTIC 24" STOP LINE
5. PLASTIC CROSSWALK LINE PER WSDOT STANDARD PLAN M-15.10-01
6. PLASTIC TRAFFIC ARROW PER WSDOT STANDARD PLAN M-24.40-01
   - STA 78+00, 0' LT. = 2 EA
   - STA 82+12, 0' LT & 12' RT = 2 EA
   - STA 82+77, 0' LT & 12' RT = 2 EA
7. PAINTED TWO-WAY LEFT TURN CENTER LINE
8. PLASTIC BICYCLE LANE SYMBOL PER WSDOT STANDARD PLAN M-9.50-01
   - STA 81+00, RT
   - STA 82+95, LT

CHANNELIZATION NOTE:

PLASTIC AND PAINTED LINES SHALL BE PER WSDOT STANDARD PLAN M-20.10-02 UNLESS OTHERWISE NOTED.

SIGN LEGEND

M4-11
24" X 6"
SHEETING TYPE IV

7 "BEGIN SIGN"
STA 82+50, 27.5' LT.
MOUNT ABOVE SIGN 8

M4-12
24" X 6"
SHEETING TYPE IV

6 "END SIGN"
STA 82+00, 27.5' RT.
MOUNT ABOVE SIGN 8

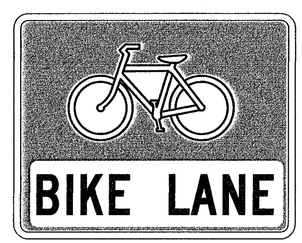

R3-17
30" X 24"
SHEETING TYPE IV

8 "BIKE LANE SIGN"
STA 82+00, 27.5' RT.
STA 82+50, 27.5' LT.

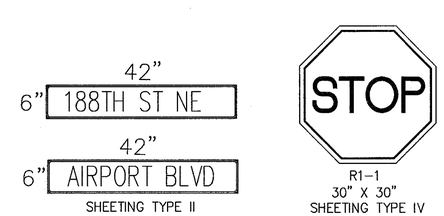

R1-1
30" X 30"
SHEETING TYPE IV

W3-1
30" X 30"
SHEETING TYPE IV

1 "STOP SIGN & STREET SIGNS"
STA 83+25, 31.0' RT.

2 "STOP AHEAD"
STA 79+75, 27.5' RT.

R2-1
24" X 30"
SHEETING TYPE IV

3 "SPEED LIMIT 25"
STA 82+00, 27.5' LT.

R4-7
24" X 30"
SHEETING TYPE IV

5 "STAY RIGHT SIGN"
STA 80+39, 0' LT.

SIGN NOTES:

1.) SIGNS SHALL BE INSTALLED PER CITY DETAIL R-120.

2.) STREET SIGNS SHALL BE PER CITY DETAIL R-110 AND SHALL BE DOUBLED SIDED.

3.) SIGNS PER WSDOT SIGN FABRICATION MANUAL.

PLAN CHECK	BY	DATE

DATE	NO.	REVISION	BY

DESIGNED BY: BJH
DRAWN BY: MPN

BRYAN J. HUSONKA — STATE OF WASHINGTON — REGISTERED PROFESSIONAL ENGINEER — 9-26-13

APPROVED FOR CONSTRUCTION
JAMES KELLY, PE
PUBLIC WORKS DIRECTOR
05-16-13
DATE APPROVED:

CITY OF ARLINGTON

AECOM
710 2nd Ave, Suite 1000
Seattle, Wa 98104
T 206.624.9349
WWW.AECOM.COM

CITY OF ARLINGTON
AIRPORT BOULEVARD ROAD IMPROVEMENTS
CHANNELIZATION & SIGNING PLAN

REFERENCE SHEET NO. CH2

SHEET 19 OF 25 SHEETS

Plotted: Apr 26, 2013 - 8:51am randallm P:\Water\60283126 - Airport Blvd Phase 2 Design\CADD\Civil\Sheet\112736-CH1_CH2.dwg Layout Name: CH2
Last Saved By: huschkab Apr 24, 2013 - 4:57pm

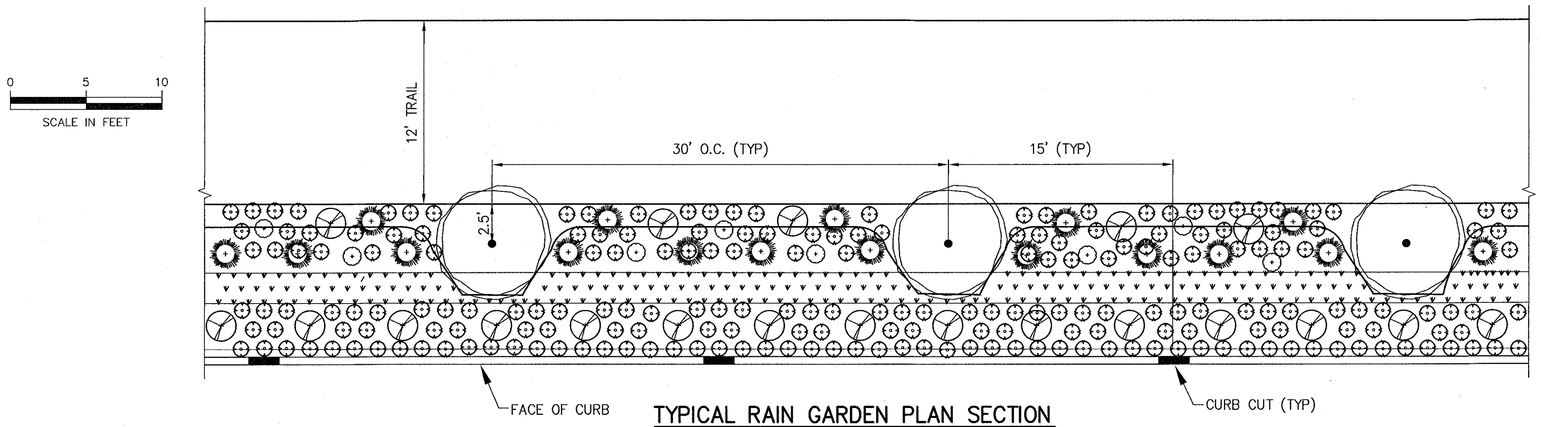

TYPICAL RAIN GARDEN PLAN SECTION

SCALE: 1' = 5"

RAIN GARDEN PLANT SCHEDULE

TREES	BOTANICAL NAME	COMMON NAME	INSTALL SIZE	MATURE SIZE	SPACING	QUANTITY
	ACER RUBRUM	KARPICK	2" CAL.	35'	AS SHOWN	190*
SHRUBS						
	MAHONIA OQUIFOLIUM	OREGON GRAPE	24" HT.	–	AS SHOWN	580
	ARCTOSTAPHLOS UVA–URSI	KINNIKINNICK	4" POT	–	18" TRIANGULAR SPACING	11,160
	MYRICA GALE	SWEET GALE	24" HT.	–	AS SHOWN	1,160
	SYMPHORICARPOS ALBA	SNOW BERRY	24" HT.	–	AS SHOWN	1,350
EMERGENTS				–		
	CAREX STIPATA	OWLFRUIT SEDGE	BARE ROOT SEEDLING	–	12" TRIANGULAR SPACING	8,790
	JUNCUS TENUIS	PATH RUSH	BARE ROOT SEEDLING	–	12" TRIANGULAR SPACING	8,790

*NOTE

QUANTITY INCLUDES STREET TREES ON SIDEWALK SIDE OF ROADWAY SECTION. TREES ARE SPACED AS SHOWN EXCEPT ARE PLANTED 3' OUTSIDE OF SIDEWALK ON OPPOSITE SIDE OF SIDEWALK AS RAIN GARDEN.

GENERAL LANDSCAPING NOTES:

1. AIRPORT REPRESENTATIVE WILL APPROVE ALL FINAL PLANTING LOCATIONS IN MEDIANS AND RAIN GARDENS.
2. ANY PLANT SUBSTITUTIONS SHALL BE APPROVED BY AIRPORT REPRESENTATIVE.

SHRUB PLANTING NOTE

THE LANDSCAPE CONTRACTOR SHALL DETERMINE FINAL LOCATION OF SHRUB PLANTING WITHIN THE GENERAL AREA SHOWN ON THE PLAN SECTION.

LANDSCAPING TOPSOIL NOTES

TOPSOIL TYPE B SHALL BE NATIVE TOPSOIL TAKEN FROM WITHIN THE PROJECT LIMITS EITHER FROM THE AREA WHERE ROADWAY EXCAVATION IS TO BE PERFORMED OR FROM STRIPPING FROM BORROW, PIT, OR QUARRY SITES, OR FROM OTHER DESIGNATED. THE GENERAL LIMITS OF THE MATERIAL TO BE UTILIZED FOR TOPSOIL WILL BE INDICATED IN THE PLANS OR IN THE SPECIAL PROVISIONS. THE OWNERS GEOTECHNICAL REPRESENTATIVE WILL MAKE THE FINAL DETERMINATION OF THE AREAS WHERE THE MOST SUITABLE MATERIAL EXISTS WITHIN THESE GENERAL LIMITS. THE CONTRACTOR SHALL RESERVE THIS MATERIAL FOR THE SPECIFIED USE. MATERIAL FOR TOPSOIL TYPE B SHALL NOT BE TAKEN FROM A DEPTH GREATER THAN 1–FOOT FROM THE EXISTING GROUND UNLESS OTHERWISE DESIGNATED BY THE GEOTECHNICAL REPRESENTATIVE. IN THE PRODUCTION OF TOPSOIL TYPE B, ALL VEGETATIVE MATTER, LESS THAN 4–FEET IN HEIGHT, SHALL BECOME A PART OF THE TOPSOIL. PRIOR TO TOPSOIL REMOVAL, THE CONTRACTOR SHALL REDUCE THE NATIVE VEGETATION TO A HEIGHT NOT EXCEEDING 1–FOOT. NOXIOUS WEDS, AS DESIGNATED BY AUTHORIZED STATE AND COUNTY OFFICIALS, SHALL NOT BE INCORPORATED IN THE TOPSOIL, AND SHALL BE REMOVED AND DISPOSED OF AS DESIGNATED ELSEWHERE OR AS APPROVED BY THE GEOTECHNICAL REPRESENTATIVE.

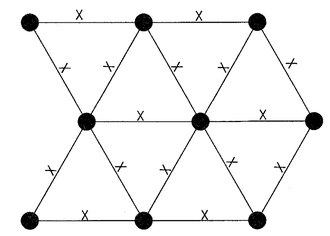

GROUNDCOVER EMERGENT TRIANGULAR SPACING DETAIL

X = 18" GROUNDCOVER
X = 12" EMERGENTS

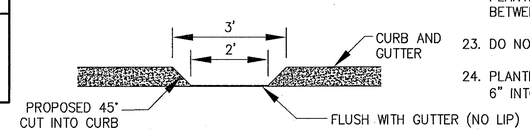

TYPICAL PROPOSED CURB CUT

NOT TO SCALE

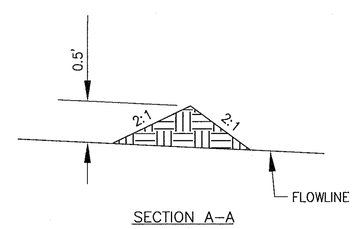

SECTION A–A

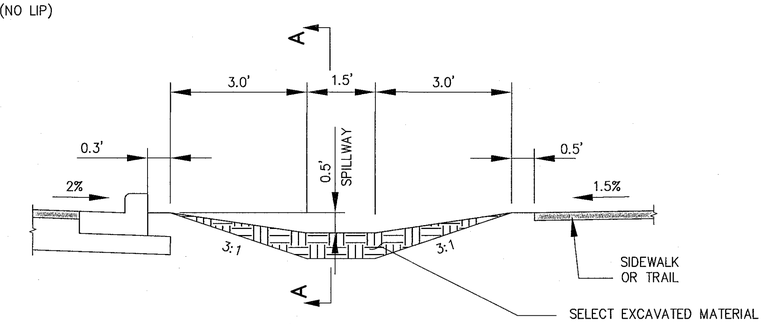

TYPICAL CHECK DAM DETAIL

NOT TO SCALE

NOTE: WHERE SHOWN, INSTALL CHECK DAMS MIDWAY BETWEEN CURB CUTS

RAIN GARDEN PLANTING NOTES

1. SEE RAIN GARDEN PLANT SCHEDULE FOR PLANT QUANTITIES, SIZE, SPACING AND SPECIES.
2. ON–SITE SOIL MIXING OR PLACEMENT NOT ALLOWED WHEN SOIL IS SATURATED, FROZEN, OR IN THE OPINION OF THE ENGINEER, IN A CONDITION DETRIMENTAL TO THE WORK.
3. LANDSCAPE INSTALLER TO TEST SOIL MIXTURE FOR FERTILITY, MICRONUTRIENTS AND OPTIMUM CONDITION FOR PLANT ESTABLISHMENT.
4. ALL PLANTINGS WITHIN THE RAIN GARDEN SHALL OCCUR AFTER THE AMENDED SOIL HAS BEEN EVENLY SATURATED THROUGHOUT THE ENTIRE AREA.
5. AFTER PLANTING IMMEDIATELY SATURATE ALL PLANTINGS TO ELIMINATE AIR POCKETS AND FACILITATE SETTLING OF BACKFILL MATERIAL.
6. ALL PLANTS SHALL BE MARKED WITH BIODEGRADABLE SURVEY FLAGGING TO FACILITATE FUTURE MONITORING.
7. ALL PLANTS INSTALLED 6" ABOVE BOTTOM OF THE RAIN GARDEN AND SHALL BE PLANTED IN A PLANTING AREA CONTAINING NO TURF. PROVIDE 3" DEPTH OF DECOMPOSED ORGANIC MULCH FOR ALL PLANTING AREAS. MULCH AREAS SHALL REMAIN FREE OF WEEDS AND COMPETING PLANTS TO ENSURE OPTIMUM GROWTH.
8. ALL TREES OVER 4' IN HEIGHT SHALL BE STAKED. SEE DETAIL THIS SHEET.
9. SPECIFIC LOCATIONS FOR TREES SHALL BE ESTABLISHED BY THE LANDSCAPE CONTRACTOR IN THE FIELD.
10. ROOT MASSES OF CONTAINERIZED STOCK SHOULD BE "SCORED" WITH A SHARP OBJECT TO ENSURE THE PLANTS WILL NOT BECOME ROOT BOUND.
11. EMERGENT SHALL BE PLANTED IN SIMILAR GROUPS OF NO LESS THAN 10 PLANTS TRIANGULARLY SPACED. (SEE PLANT SCHEDULE).
12. BARE ROOT EMERGENT SHALL BE PLANTED BETWEEN APRIL AND MAY, AND NOT PLANTED IN STANDING WATER.
13. BARE ROOT EMERGENT SHALL POSSES AN EQUAL ROOT TO SHOOT RATIO.
14. WATERING OF PLANTS SHALL BE DONE AS NEEDED FOR PLANT SURVIVAL FOR 3 YEARS AFTER PLANTING.
15. ALL NON–NATIVE/UNDESIRABLE PLANTS (BLACKBERRY, SCOTCH BROOM, REED CANARY GRASS, ETC.) THAT MAY INHIBIT THE GROWTH OF NEW PLANTINGS SHALL BE REMOVED FROM THE AREA.
16. SHRUB AND TREE PLANTING DATES: OCTOBER 1 THROUGH APRIL 15.
17. ANNUAL MAINTENANCE OF RAIN GARDEN LANDSCAPE SHALL INCLUDE WEEDING, REMOVING DEAD PLANT MATERIAL, MONITORING FOR EROSION, PRUNING AND REPLACING MULCH.
18. NO GROUND COVERS SHALL BE PLANTED UNDER SHRUBS AND/OR EVERGREEN TREES.
19. ANY PLANT SUBSTITUTIONS SHALL BE APPROVED BY OWNER.
20. THE OPERATION & MAINTENANCE MANUAL FOR THE RAIN GARDEN IS LOCATED IN THE DRAINAGE REPORT, PREPARED BY HBA.
21. SEE THE GEOTECHNICAL REPORT PREPARED BY ASSOCIATED EARTH SCIENCES FOR PHASE IA FOR SOIL MIX INSTRUCTIONS AND PREPARATION REQUIREMENTS.
22. ONLY SHRUBS AND GROUND COVER THAT HAVE A NATURAL GROWTH OF TWO FEET OR UNDER ARE TO BE PLANTED WITHIN 25' OF INTERSECTIONS AND ALL OTHER LOCATIONS THAT MAY POSE A SIGHT OBSTRUCTION BETWEEN VEHICLE AND TRAIL USERS.
23. DO NOT PLANT SHRUBS WITHIN 2' OF EDGE OF PAVEMENT, SIDEWALK OR TRAIL.
24. PLANTING AREA AT TOP OF RAIN GARDEN NEXT TO 12' PATH SHALL RECEIVE A 3–WAY TOPSOIL MIX TILLED 6" INTO THE GROUND BEFORE PLANTING.

PLAN CHECK	BY	DATE

DATE	NO.	REVISION	BY

DESIGNED BY: BJH
DRAWN BY: MPN

BRIAN J. HUSCHKA — STATE OF WASHINGTON — REGISTERED PROFESSIONAL ENGINEER — 9-26-13

APPROVED FOR CONSTRUCTION

JAMES KELLY, PE
PUBLIC WORKS DIRECTOR
05-16-13

DATE APPROVED:

CITY OF ARLINGTON

AECOM
710 2nd Ave, Suite 1000
Seattle, Wa 98104
T 206.624.9349
WWW.AECOM.COM

CITY OF ARLINGTON
AIRPORT BOULEVARD ROAD IMPROVEMENTS
RAIN GARDEN PLANTING
PLAN & DETAILS

REFERENCE SHEET NO. L1

SHEET 20 OF 25 SHEETS

Plotted: Apr 26, 2013 - 8:52am randalim P:\Water\60283126 - Airport Blvd Phase 2 Design\CADD\Civil\Sheet\112736-L1_L2.dwg Layout Name: L1
Last Saved By: huschkab Apr 26, 2013 - 5:27am

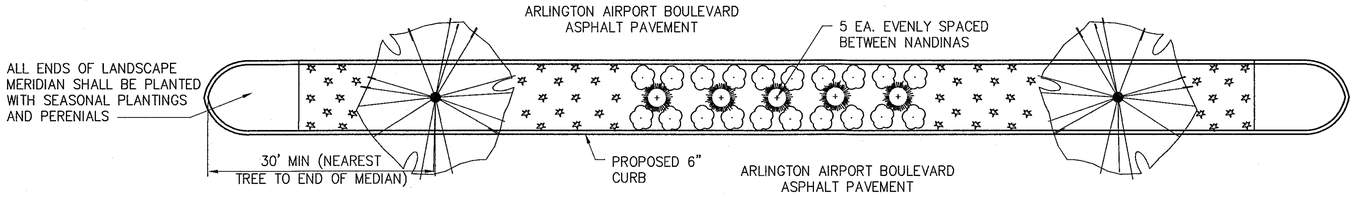

LANDSCAPING – MEDIAN AT STATION 75+50

SCALE: 1" = 10'–0"

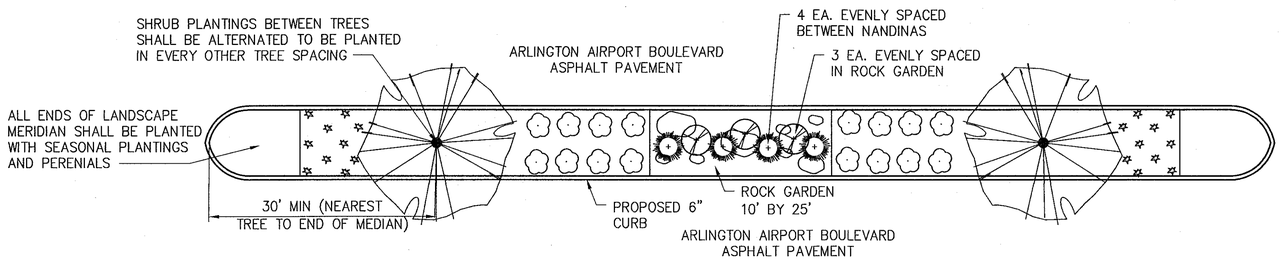

LANDSCAPING – MEDIAN AT STATION 16+12 & 79+00

SCALE: 1" = 10'–0"

MEDIAN PLANTING NOTES

1. SEE LANDSCAPE PLANT SCHEDULE AND ROCK GARDEN NOTE FOR PLANT QUANTITIES, SIZE, SPACING AND SPECIES.
2. ON–SITE SOIL MIXING OR PLACEMENT NOT ALLOWED WHEN SOIL IS SATURATED, FROZEN, OR IN THE OPINION OF THE ENGINEER, IN A CONDITION DETRIMENTAL TO THE WORK.
3. EXISTING SOILS TO BE AUGMENTED WITH A TWO–INCH LAYER OF FULLY COMPOSTED ORGANIC MATERIAL ROTOTILLED A MINIMUM OF SIX INCHES DEEP.
4. AFTER PLANTING IMMEDIATELY SATURATE ALL PLANTING PITS TO ELIMINATE AIR POCKETS AND FACILITATE SETTLING OF BACKFILL MATERIAL.
5. PLANTING PITS SHALL RECEIVE AN APPLICATION OF 4–2–2 TRANSPLANT FERTILIZER.
6. PROVIDE 3" DEPTH OF MEDIUM RED BEAUTY BARK FOR ALL PLANTING BEDS. BARK AREAS SHALL REMAIN FREE OF WEEDS AND COMPETING PLANTS TO ENSURE OPTIMUM GROWTH.
7. ALL TREES OVER 4' IN HEIGHT SHALL BE STAKED. SEE DETAIL THIS SHEET.
8. SPECIFIC LOCATIONS FOR TREES SHALL BE ESTABLISHED BY THE LANDSCAPE CONTRACTOR IN THE FIELD.
9. DO NOT LOCATE TREES WITHIN 30 FEET OF ANY ROAD INTERSECTION.
10. ROOT MASSES OF CONTAINERIZED STOCK SHOULD BE "SCORED" WITH A SHARP OBJECT TO INSURE THE PLANTS WILL NOT BECOME ROOT BOUND.
11. LANDSCAPE PLANTS SHALL BE INSTALLED AFTER SITE WORK IS DONE, INCLUDING ROADS UTILITIES, DRIVEWAYS, ETC.
16. ALL NON–NATIVE/UNDESIRABLE PLANTS (BLACKBERRY, SCOTCH BROOM, REED CANARY GRASS, ETC.) THAT MAY INHIBIT THE GROWTH OF NEW PLANTINGS SHALL BE REMOVED FROM THE AREA.
17. OMITTED
18. PLANTING DATES: OCTOBER 1 THROUGH APRIL 15.
19. ANY PLANT SUBSTITUTIONS SHALL BE APPROVED BY OWNER.
20. INSTALL MANUFACTURED POLY ROOT BARRIER. ROOT BARRIER SHALL BE 24" DEEP AND COMPLETELY ENCIRCLE THE TREE WITH A WIDTH OF 4' BETWEEN OPOSITE SIDES. ROOT BARRIER SHALL BE A PRODUCT SPECIFICALLY STATED TO BE USED AS A ROOT BARRIER, AND SHALL HAVE RIBBED SUPPORTS.
21. KEEP ALL SHRUB BEDS CLEAR OF GROUND COVER. MAINTAIN A MINIMUM OF 36 INCHES BETWEEN BEDS AND GROUNDCOVER PLANTINGS.
22. OMITTED
23. ONLY SHRUBS AND GROUND COVER THAT HAVE A NATURAL GROWTH OF TWO FEET OR UNDER ARE TO BE PLANTED WITHIN 25' OF INTERSECTIONS AND ALL OTHER LOCATIONS THAT MAY POSE A SIGHT OBSTRUCTION BETWEEN VEHICLE AND TRAIL USERS.
24. ALL PLANTING AREAS SHALL RECEIVE A 3–WAY TOPSOIL PLANTING MIX.

LANDSCAPE MEDIAN PLANT SCHEDULE*

TREES	BOTANICAL NAME	COMMON NAME	INSTALL SIZE	MATURE SIZE	SPACING	QUANTITY
	PYRUS CALLERYANA 'CALLERY'	CALLERY PEAR	2" CAL.	30'	AS SHOWN	6
	THUJA OCCIDENTALIS 'GOLDEN TUFFET' ARBORVITAE	NORTHERN WHITE CEDAR	2 GAL	1.25'X1.25'	AS SHOWN	6
SHRUBS	BOTANICAL NAME	COMMON NAME	INSTALL SIZE	MATURE SIZE	SPACING	QUANTITY
	NANDINA DOMESTICA 'FIREPOWER'	DWARF NANDINA FIREPOWER	12" HT.	–	AS SHOWN	52
	CHAMAECYPARIS OBTUSA 'KOSTERI'	DWARF HINOKI CYPRESS 'KOSTERI'	2 GAL	4'X4'	AS SHOWN	14
GROUND COVER	BOTANICAL NAME	COMMON NAME	INSTALL SIZE	MATURE SIZE	SPACING	QUANTITY
	JUNIPERUS HORIZONTALIS 'BLUE CHIP'	BLUE CHIP JUNIPER	6" HT.	–	AS SHOWN	90

* EXCLUDES ROCK GARDEN

SHRUB PLANTING NOTE

THE LANDSCAPE CONTRACTOR SHALL DETERMINE FINAL LOCATION OF SHRUB PLANTING WITHIN THE GENERAL AREA SHOWN ON THE PLAN SECTION.

LANDSCAPING SETBACK FROM INTERSECTIONS

NO TREES OR SHRUBS SHALL BE PLANTED WITHIN 30' OF A PUBLIC ROAD INTERSECTION.

ROCK GARDEN NOTE

THE ROCK SHALL CONSIST OF THE FOLLOWING:

1. SOIL SHALL BE MOUNDED 1' ABOVE GRADE
2. 2 MAN ROCK – 2 EACH
3. 1 MAN ROCK – 3 EACH
4. 1/2 MAN ROCK – 7 EACH
5. ROCKS TO BE SET INTO SOIL BY 1/3
6. PLANTS SHALL BE:
   - DWARF GLOBE BLUE SPRUCE (PICEA PUNGENS 'GLOBOSA'
   - JUNIPER GROUND COVER
   - KINNIKINNICK GROUND COVER
   - CANDY TUFT
   - LAVENDER
   - HEATHER
   - ORNAMENTAL GRASS
7. ACTUAL NUMBER OF PLANTS AND LAYOUT WILL BE BY LANDSCAPER

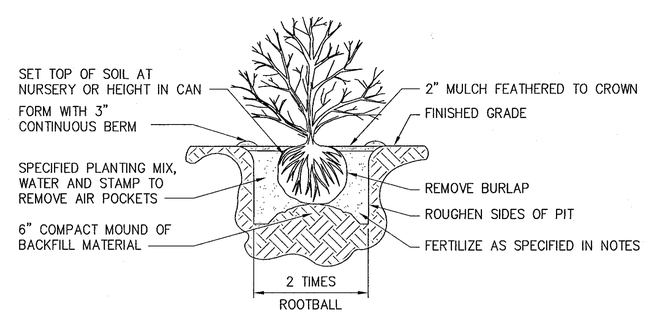

SHRUB PLANTING DETAIL

NOT TO SCALE

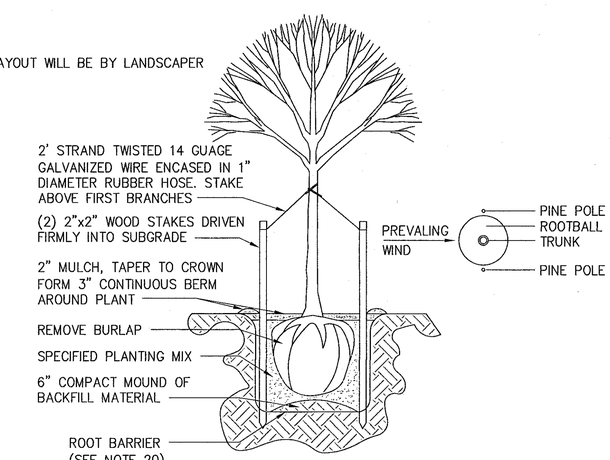

TREE PLANTING DETAIL

NOT TO SCALE

PLAN CHECK	BY	DATE

DATE	NO.	REVISION	BY

DESIGNED BY: BJH
DRAWN BY: MPN

RYAN J. HUSCHKA, STATE OF WASHINGTON, REGISTERED PROFESSIONAL ENGINEER

APPROVED FOR CONSTRUCTION
JAMES KELLY, PE
PUBLIC WORKS DIRECTOR
05-16-13
DATE APPROVED:

CITY OF ARLINGTON

AECOM
710 2nd Ave, Suite 1000
Seattle, Wa 98104
T 206.624.9349
WWW.AECOM.COM

CITY OF ARLINGTON
AIRPORT BOULEVARD ROAD IMPROVEMENTS
LANDSCAPING PLANTING
PLANS & DETAILS

REFERENCE SHEET NO. L2

SHEET 21 OF 25 SHEETS

Plotted: Apr 26, 2013 - 8:52am randallm P:\Water\60283126 - Airport Blvd Phase 2 Design\CADD\Civil\Sheet\112736-L1_L2.dwg Layout Name: L2
Last Saved By: huschkab Apr 26, 2013 - 5:27am

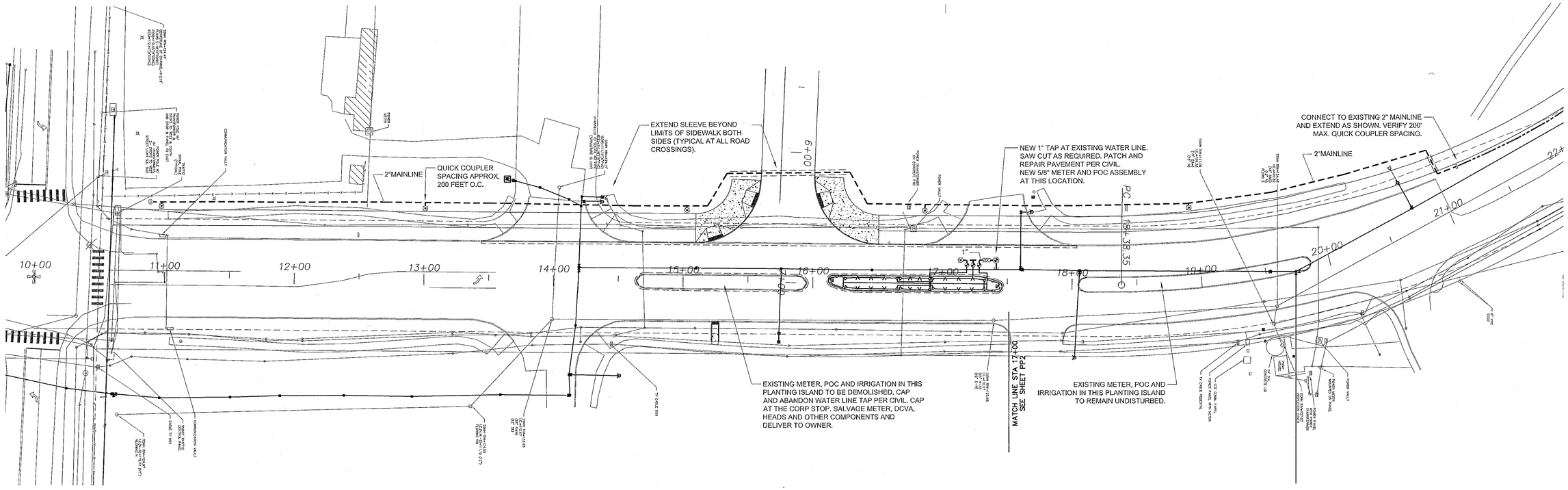

1 Irrigation Plan Sta 10+00 to Sta 21+00

SCALE: 1" =40'-0"

0 20 40
SCALE IN FEET

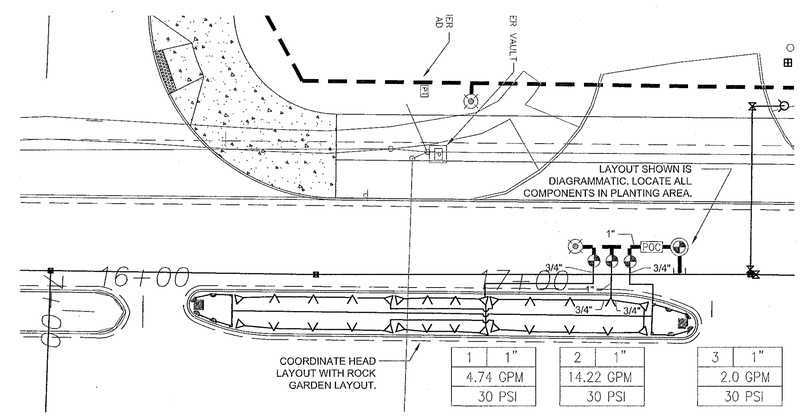

2 Plan Enlargement at Center Island # 1

SCALE: 1" =20'-0"

0 10 20
SCALE IN FEET

NORTH

STATE OF WASHINGTON REGISTERED LANDSCAPE ARCHITECT

DAVID STUART ANDREWS
CERTIFICATE NO. 439

andrews LANDSCAPE ARCHITECTS

NOTE
INFORMATION CONTAINED ON THESE PLANS IS BASED ON DESIGN DRAWINGS AND MAY NOT REFLECT ACTUAL FIELD CONDITIONS.

CALL TWO BUSINESS DAYS BEFORE YOU DIG - CALL 811

PLAN CHECK	BY	DATE

DATE	NO.	REVISION	BY

DESIGNED BY: DSA
DRAWN BY: DSA

APPROVED FOR CONSTRUCTION

JAMES KELLY, PE
PUBLIC WORKS DIRECTOR
05-16-13

DATE APPROVED:

CITY OF ARLINGTON

AECOM
710 2nd Ave, Suite 1000
Seattle, Wa 98104
T 206.624.9349
WWW.AECOM.COM

CITY OF ARLINGTON
AIRPORT BOULEVARD ROAD IMPROVEMENTS
IRRIGATION PLAN
STA 10+00 TO STA 21+00

REFERENCE SHEET NO.
LP 1

SHEET 22 OF 25 SHEETS

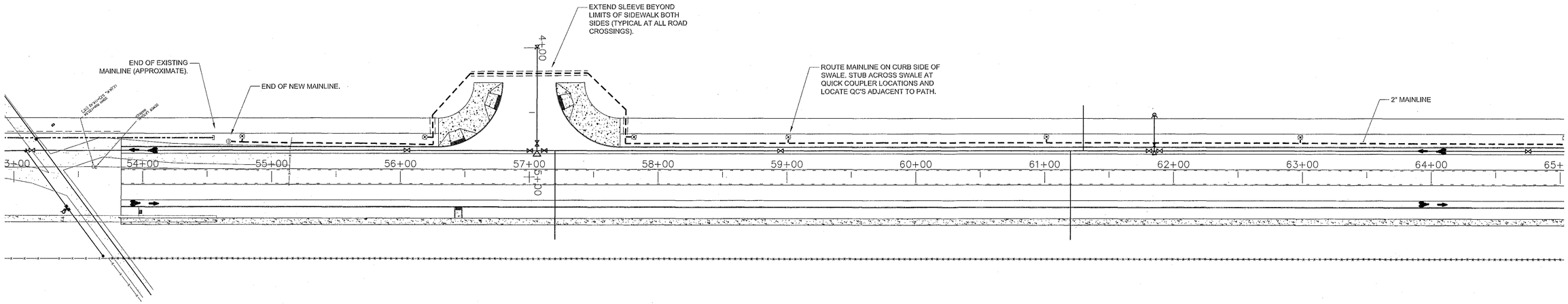

1 Irrigation Plan Sta 54+00 to Sta 65+00

SCALE: 1" =40'-0"

0 20 40
SCALE IN FEET

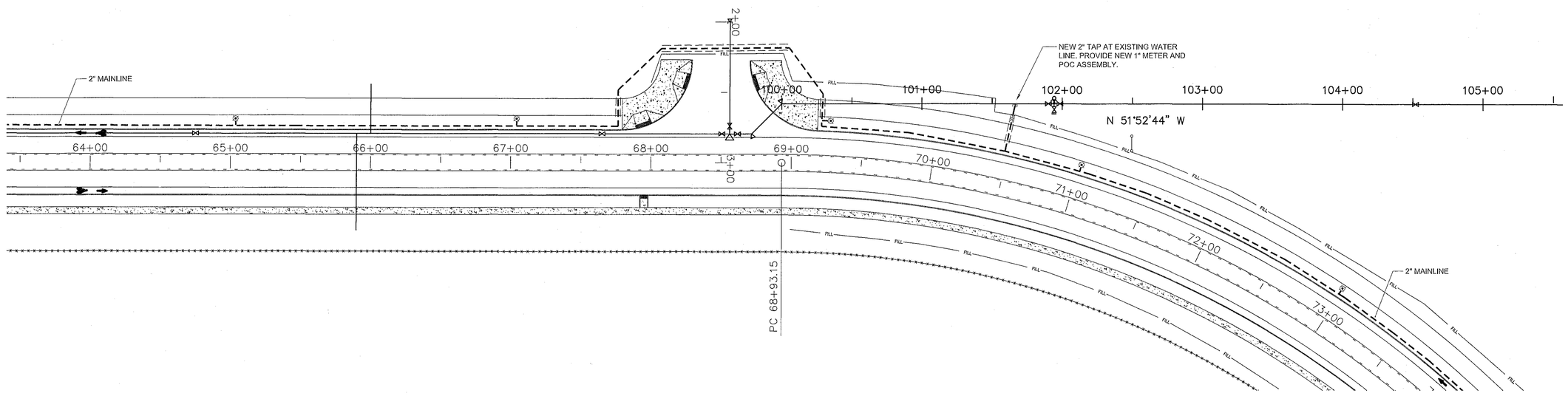

2 Irrigation Plan Sta 64+00 to Sta 73+00

SCALE: 1" =40'-0"

0 20 40
SCALE IN FEET

NORTH

STATE OF WASHINGTON REGISTERED LANDSCAPE ARCHITECT

DAVID STUART ANDREWS
CERTIFICATE NO. 439

andrews LANDSCAPE ARCHITECTS

NOTE
INFORMATION CONTAINED ON THESE PLANS IS BASED ON DESIGN DRAWINGS AND MAY NOT REFLECT ACTUAL FIELD CONDITIONS.

CALL TWO BUSINESS DAYS BEFORE YOU DIG - CALL 811

PLAN CHECK	BY	DATE

DATE	NO.	REVISION	BY

DESIGNED BY: DSA
DRAWN BY: DSA

APPROVED FOR CONSTRUCTION

JAMES KELLY, PE
PUBLIC WORKS DIRECTOR
05-16-13

DATE APPROVED:

CITY OF ARLINGTON

AECOM
710 2nd Ave, Suite 1000
Seattle, Wa 98104
T 206.624.9349
WWW.AECOM.COM

CITY OF ARLINGTON
AIRPORT BOULEVARD ROAD IMPROVEMENTS
IRRIGATION PLAN
STA 54+00 TO STA 73+00

REFERENCE SHEET NO.
LP 2

SHEET 23 OF 25 SHEETS

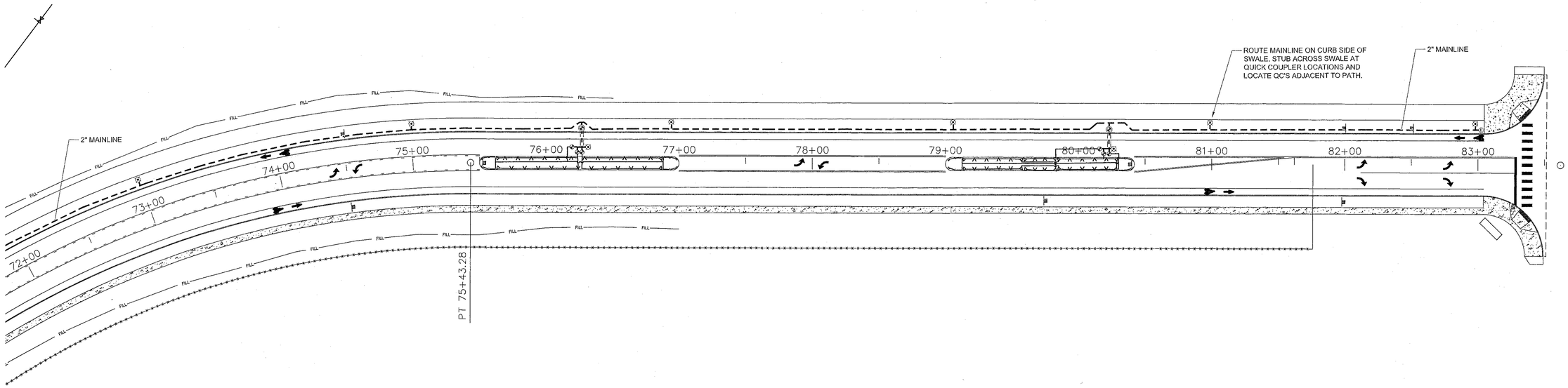

1 Irrigation Plan Sta 73+00 to Sta 83+00

SCALE: 1" =40'-0"

0 20 40
SCALE IN FEET

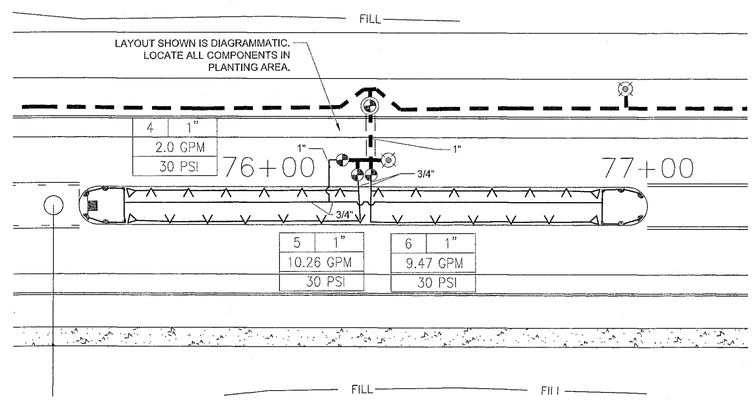

2 Plan Enlargement at Center Island # 2

SCALE: 1" =20'-0"

0 10 20
SCALE IN FEET

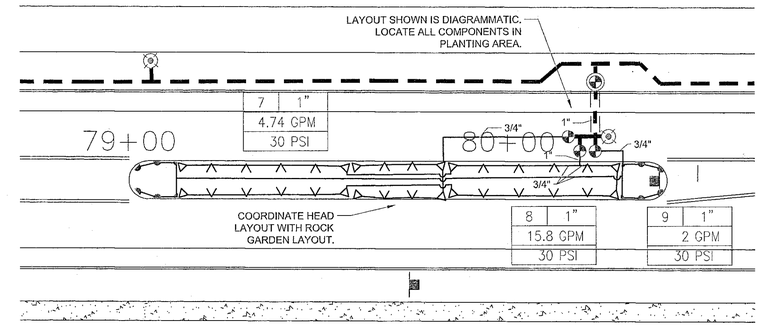

3 Plan Enlargement at Center Island # 3

SCALE: 1" =20'-0"

0 10 20
SCALE IN FEET

STATE OF WASHINGTON REGISTERED LANDSCAPE ARCHITECT

DAVID STUART ANDREWS
CERTIFICATE NO. 439

NORTH

andrews LANDSCAPE ARCHITECTS

NOTE
INFORMATION CONTAINED ON THESE PLANS IS BASED ON DESIGN DRAWINGS AND MAY NOT REFLECT ACTUAL FIELD CONDITIONS.

CALL TWO BUSINESS DAYS BEFORE YOU DIG - CALL 811

PLAN CHECK	BY	DATE

DATE	NO.	REVISION	BY

DESIGNED BY: **DSA**
DRAWN BY: **DSA**

APPROVED FOR CONSTRUCTION

JAMES KELLY, PE
PUBLIC WORKS DIRECTOR
05-16-13

DATE APPROVED:

CITY OF ARLINGTON

AECOM
710 2nd Ave, Suite 1000
Seattle, Wa 98104
T 206.624.9349
WWW.AECOM.COM

CITY OF ARLINGTON
AIRPORT BOULEVARD ROAD IMPROVEMENTS
IRRIGATION PLAN
STA 73+00 TO STA 83+00

REFERENCE SHEET NO.
LP 3

SHEET **24** OF **25** SHEETS

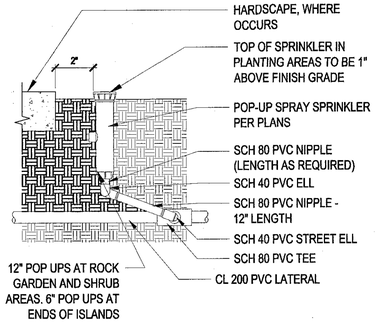

1 **POP-UP SPRAY HEAD**
SCALE: 6"=1'-0"

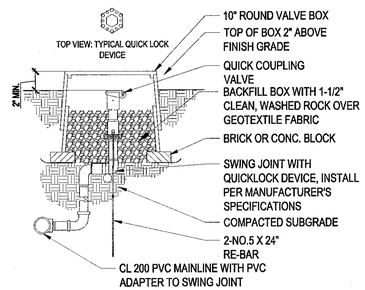

2 **QUICK-COUPLER VALVE**
SCALE: 3"=1'-0"

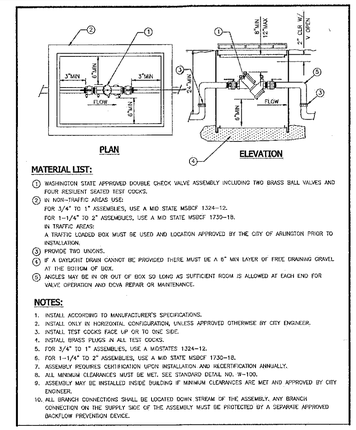

3 **DOUBLE-CHECK VALVE ASSEMBLY**
SCALE: NTS

CITY OF ARLINGTON DETAILS ARE PROVIDED ON THIS SHEET FOR REFERENCE ONLY. REFER TO THE COA STANDARD PLANS W-040 AND W-080 IN THE SPECIFICATIONS FOR MORE INFORMATION. INSTALLATION MUST CONFORM TO ALL CITY OF ARLINGTON STANDARDS.

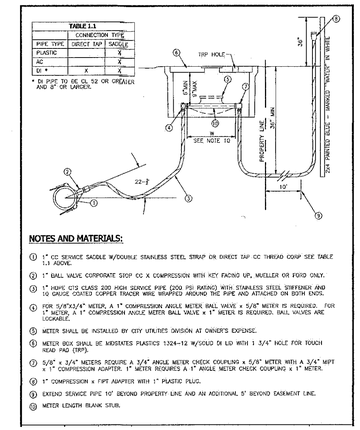

4 **RESIDENTIAL WATER SERVICE**
SCALE: NTS

NOTE:
BRASS NIPPLES AND FITTINGS TO BE USED FOR GATE VALVE AT POINT OF CONNECTION

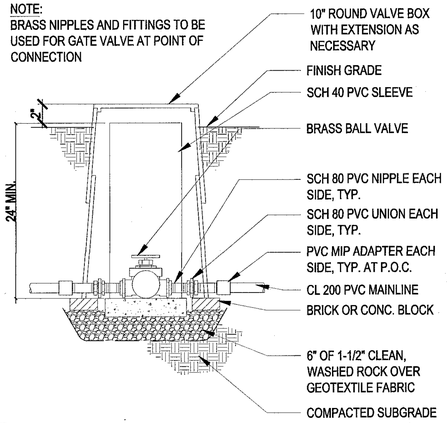

5 **BALL VALVE**
SCALE: 3"=1'-0"

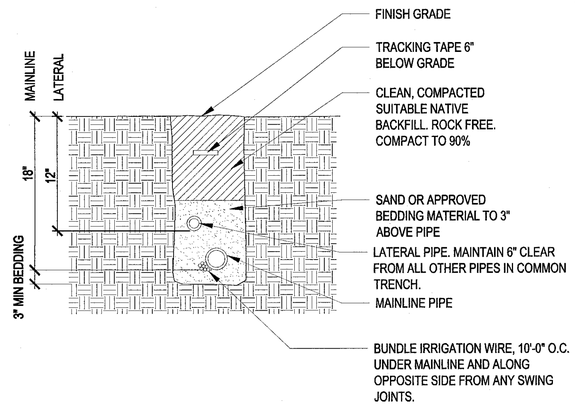

6 **IRRIGATION TRENCH**
SCALE: 3"=1'-0"

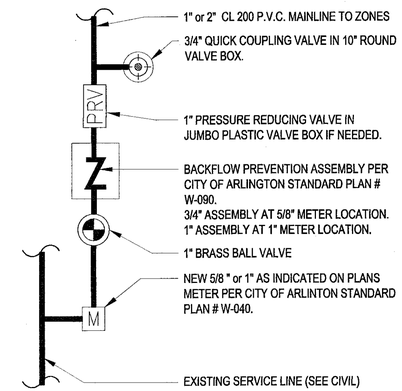

7 **POINT OF CONNECTION DIAGRAM**
SCALE: 1-1/2"=1'-0"

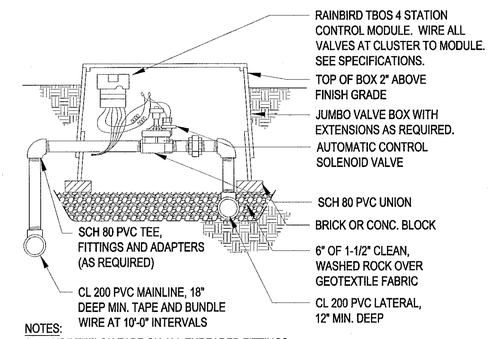

NOTES:
1. USE TEFLON TAPE ON ALL THREADED FITTINGS
2. CUT 'U' SHAPE NOTCHES ON BOTH SIDES OF BOX THAT ALLOW 2" CLEARANCE FROM TOP OF PIPE TO TOP OF CUT-OUT
3. USE WATERTIGHT WIRE SPLICES, TYP.
4. UP TO 3 VALVES PER BOX. MAX.

8 **REMOTE CONTROL VALVE**
SCALE: 1-1/2"=1'-0"

IRRIGATION EQUIPMENT LEGEND

SYMBOL	DESCRIPTION
Q T H TQ F	SPRAY SPRINKLERS
1 LP4	RAINBIRD 1800 POP-UP, MPR NOZZLE, 5 SERIES 4" POP UP BODY
1 LP4	RAINBIRD 1800 POP-UP WITH MPR NOZZLE, 10 SERIES 12" POP UP BODY
6 LP4	MAINLINE – SIZE AS NOTED ON PLAN. CL 200 PVC
6 LP4	LATERAL LINE – SIZE PER PIPE SIZING CHART. CL 200 PVC
	SLEEVE – SIZE = 2 x LINE SIZE, 2" MIN. CL 200 PVC

SYMBOL	DESCRIPTION
2 LP4	QUICK COUPLER. RAINBIRD 33-DLRC. PROVIDE 2 MATCHING VALVE KEYS.
8 LP4	ZONE CONTROL VALVE ASSEMBLY. RAINBIRD PEB WITH TBOS-PODL MATCHING SOLENOID.
5 LP4	BRASS BALL VALVE. NIBCO T-580A OR EQUAL.
D	MANUAL DRAIN VALVE. 3/4" BRASS ANGLE VALVE. CHAMPION200-BTS OR EQUAL.
POC	POINT OF CONNECTION ASSEMBLY. SEE NOTES AT EACH LOCATION FOR COMPONENT SIZE.
M	WATER METER. SEE STANDARD PLAN W-040.
7 LP4 POC	BACKFLOW PREVENTION ASSEMBLY. SEE STANDARD PLAN W-090.
	BRASS BALL VALVE.
	QUICK COUPLER VALVE
PRV	PRESSURE REDUCING VALVE IF REQUIRED, WATTS.

SYMBOL	DESCRIPTION
A1	CONTROLLER STATION NUMBER
1"	CONTROL VALVE SIZE
10.0 GPM	FLOW IN GALLONS PER MINUTE
40 PSI	ZONE OPERATING PRESSURE

PIPE SIZING CHART – CL 200 LATERALS

GALLONS / MIN.	PIPE SIZE
0 – 10	3/4 INCH
10 – 16	1 INCH
16 – 26	1-1/4 INCH
26 – 35	1-1/2 INCH
35 – 55	2 INCH

ZONE SUMMARY

ZONE NUMBER	GPM	VALVE SIZE
1	4.74	1"
2	14.22	1"
3	2.0	1"
4	2.0	1"
5	10.26	1"
6	9.47	1"
7	4.74	1"
8	15.80	1"
9	2.0	1"

IRRIGATION NOTES

1. PIPE, SLEEVE AND VALVE LAYOUT IS DIAGRAMMATIC FOR THE SAKE OF CLARITY. ROUTE ALL PIPES THROUGH PLANTING AREAS AND LOCATE ALL VALVE BOXES IN PLANTING AREAS. WHERE POSSIBLE ROUTE PIPING ADJACENT TO CURBS. AVOID ROUTING PIPING THROUGH THE CENTER OF PLANTING AREAS WHERE IT MIGHT CONFLICT WITH PLANT ROOTBALLS.

2. ALL SLEEVES MUST BE STRAIGHT RUNS. EXTEND ALL SLEEVES 24" MINIMUM BEYOND EDGE OF PAVING OR CURB.

3. PIPES MAY SHARE A COMMON TRENCH AS SHOWN ON THE DETAILS. MAINTAIN 6" CLEAR BETWEEN MAINLINES AND LATERALS. MAINTAIN 3' CLEAR BETWEEN LATERAL LINES IN A COMMON TRENCH. MAINTAIN REQUIRED BURY DEPTH AT ALL TIMES.

4. STAKE OR PAINT PIPE AND VALVE LAYOUT AND OBTAIN LANDSCAPE ARCHITECTS APPROVAL PRIOR TO BEGINNING THE WORK.

5. ALL IRRIGATION HEADS TO BE SPACED HEAD TO HEAD COVERAGE.

6. VERIFY AVAILABLE WATER PRESSURE PRIOR TO CONTRUCTION. NOTIFY LANDSCAPE ARCHITECT IF AVAILABLE STATIC PRESSURE AT METER IS LESS THAN 75 PSI.

7. ADJUST ALL HEADS TO MINIMIZE OVERSPRAY ONTO PAVED AREAS AND ELIMINATE HEAD FOGGING.

8. SEE CIVIL PLANS FOR ADDITIONAL INFORMATION AND LOCATIONS OF UNDERGROUND UTILITIES. PROVIDE UTILITY LOCATE PRIOR TO BEGINNING ANY EXCAVATION.

STATE OF WASHINGTON REGISTERED LANDSCAPE ARCHITECT
DAVID STUART ANDREWS
CERTIFICATE NO. 439

andrews LANDSCAPE ARCHITECTS

NOTE
INFORMATION CONTAINED ON THESE PLANS IS BASED ON DESIGN DRAWINGS AND MAY NOT REFLECT ACTUAL FIELD CONDITIONS.

CALL TWO BUSINESS DAYS BEFORE YOU DIG - CALL 811

PLAN CHECK	BY	DATE	DATE	NO.	REVISION	BY

DESIGNED BY: DSA
DRAWN BY: DSA

APPROVED FOR CONSTRUCTION
JAMES KELLY, PE
PUBLIC WORKS DIRECTOR
05-16-13
DATE APPROVED:

CITY OF ARLINGTON

AECOM
710 2nd Ave, Suite 1000
Seattle, Wa 98104
T 206.624.9349
WWW.AECOM.COM

CITY OF ARLINGTON
AIRPORT BOULEVARD ROAD IMPROVEMENTS
IRRIGATION LEGEND, DETAILS AND NOTES

REFERENCE SHEET NO. LP 4

SHEET 25 OF 25 SHEETS

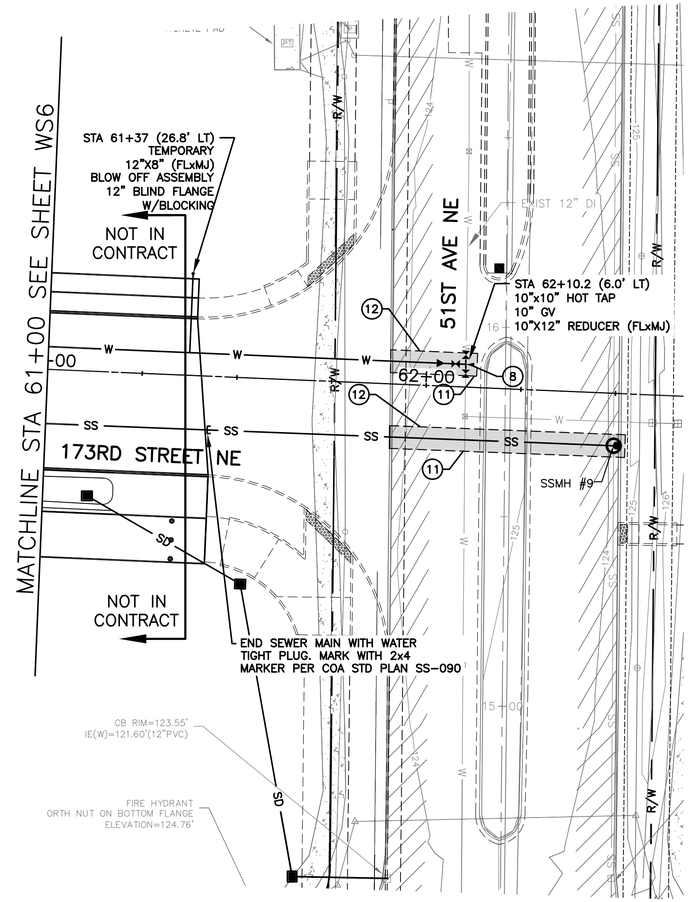

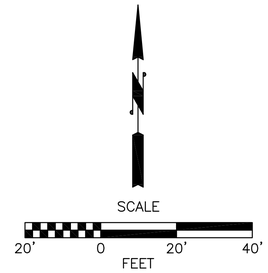

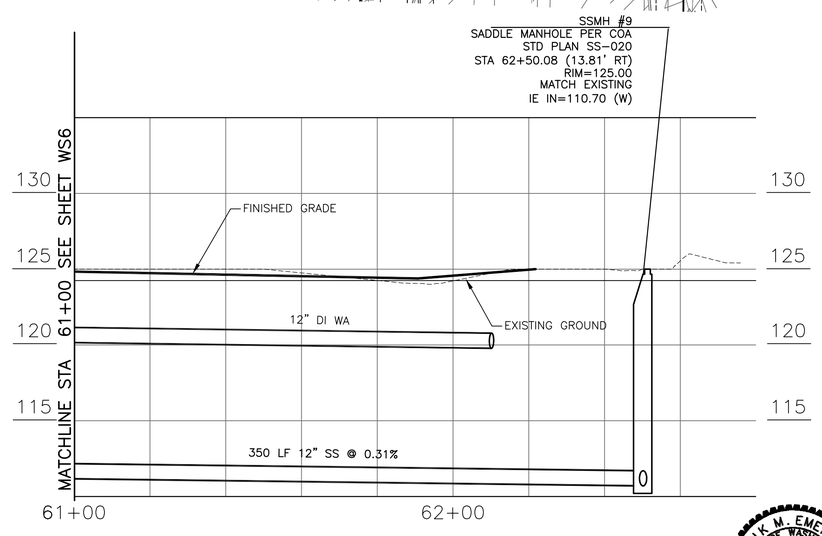

WATER AND SEWER NOTES:

1. FIRE HYDRANT ASSEMBLY PER COA STD PLAN W-010. SET HYDRANT 3' FROM BACK OF SIDEWALK WHERE PRESENT.
2. 2" COMMERCIAL WATER SERVICE PER COA STD DETAIL W-050. INSTALL ENTIRE SERVICE EXCEPT METER. SET METER BOX AT EXISTING GRADE THEN BURY UNDER 2' DEPTH PILE OF SOIL FOR PROTECTION. METER TO BE INSTALLED AT LATER DATE BY THE CITY.
3. SANITARY SIDE SEWER PER COA STD DETAIL SS090 AND DETAIL. MAINTAIN 7' MINIMUM COVER AT PROPERTY LINE.
4. ADJUST WATER METER BOX TO GRADE.
5. NOT USED.
6. 2" BLOW OFF ASSEMBLY PER COA STD PLAN W-180.
7. APPROXIMATE UTILITY LOCATION CONTRACTOR TO LOCATE UTILITIES PRIOR TO BEGINNING EXCAVATION. NOTIFY ENGINEER OF CONFLICTS.
8. TAPPING TEE PER COA STD PLAN W-200.
9. SANITARY SEWER MANHOLE PER COA STD DETAIL SS-010.
10. FILL LOW AREA WITH GRAVEL BORROW TO PROVIDE MIN 3.0' COVER OVER WATERLINE 10.0' MIN ON EACH SIDE OF WATER MAIN. CONSTRUCT IN ACCORDANCE WITH SECTION 2-03.3(14) OF THE STANDARD SPECIFICATIONS SEE DETAIL, SHEET WS11.
11. SAWCUT EXISTING PAVEMENT, SIDEWALK OR CURB AND GUTTER.
12. PAVEMENT RESTORATION PER DETAIL COA STD PLAN R-140.

GENERAL NOTE:

SEE WATER AND SEWER GENERAL NOTES ON SHEET WS11.

NAVD88

CALL 2 BUSINESS DAYS BEFORE YOU DIG
1 800 424-5555
UTILITIES UNDERGROUND LOCATION CENTER

No.	Date	Revision	By	Appr.

Perteet
425-252-7700 I 1-800-615-9900
2707 Colby Avenue, Suite 900
Everett, Washington 98201

APPROVED FOR CONSTRUCTION
JAMES KELLY, PE
PUBLIC WORKS DIRECTOR
05-16-13
DATE APPROVED

100% SUBMITTAL

ERIK M. EMERSON
STATE OF WASHINGTON
40584
REGISTERED PROFESSIONAL ENGINEER
5-15-13

Drawn By MMC	Date 5/31/13	SCALE
Designed By EE	5/31/13	Horiz 1"=20'
Checked By DCS	5/31/13	Vert –
Approved By		Project Number 20110044

CITY OF ARLINGTON
173RD STREET NE EXTENSION
WATER & SEWER PLAN

Drawing No. WS7
Sheet No. of Total

May 15, 2013 - 4:30pm MickeyC X:\Arlington, City of\Projects\20110044 - 173rd Pl Extension\CADD\Plan Sheets\20110044-WS.dwg Layout Name: Don't Print